Active Table of Contents

CLICK HERE to go to the beginning of the active ***Table of Contents.***

Click on any item in the *TOC* and you will go *directly* to that product page.

Internal Navigation

Click on any **description with page #** in a RED box to navigate directly to that page. These are components that are related to the items on the page that you are viewing.

Table des Matières Active

CLIQUEZ ICI d'aller au début de la ***Table des Matières*** active.

Cliquez sur n'importe quel item dans la table et vous irez *directement* sur la page du produit.

Navigation Interne

Cliquez sur n'importe quelle **description avec le No de la page** dans la boîte ROUGE pour naviguer directement sur cette page. Ceux-ci sont les composants reliés au items sur la page que vous regardez actuellement.

best quality and best price

With Master Deluxe Filter Cartridges
you don't have to choose...

Our filter cartridges have the *best features* of the big brand names:

Filter Media

REEMAY® the very best, an industry leader for decades, the choice of most major pool & spa filter cartridge manufacturers...made in the USA

Filter Core

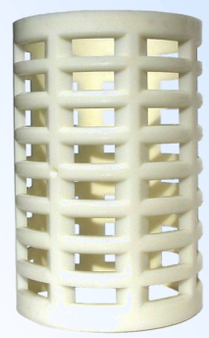

High-flow, low pressure drop, open grid design - maximizes the active filtration area - a proven design, particularly good for circ-pumps

Filter Selection

Large selection of popular models

Price

Compare and see for yourself...

p.80-82

This is what makes

MASTER DELUXE©

Filter Cartridges the

very best value!

©2018

la meilleure qualité et le meilleur prix

Avec les Cartouches de Filtre Master Deluxe
vous n'avez pas besoin de choisir...

Nos cartouches de filtre ont les *meilleures caractéristiques* des grands noms de marque:

Média du filtre
REEMAY® le meilleur, un produit d'appel dans l'industrie pour des décennies, le choix de la plupart des manufacturiers de cartouche de filtre pour la piscine et le spa... fait aux États-Unis.

Noyau du filtre
Grand flux, chute de pression basse, dessein quadrillé ouvert- maximise la surface active de la filtration- un dessein prouvé, particulièrement bon pour les pompes de circulation

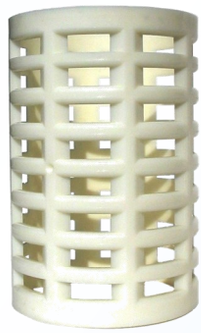

Sélection de Filtre
Une grande selection des modèles les plus populaires

Prix
Comparez et voyez pour vous meme...

p.80-82

C'est ceci qui fait nos Cartouches de Filtre

MASTER DELUXE©

la meilleure valeur!

©2018

Everything for an amazing hot tub experience...

Tout pour une expérience de spa étonnante...

©2018

...naturally from ELM!

Join the Revolution of *Natural* Hot Water Care!

All Organic

- Master Radiance Enzymes are all organic with no added soaps, lanolin or other foreign chemicals.
- Use Enzymes on a weekly basis to maintain a good oxidation process.
- The more frequently you use Enzymes, the less frequently you will need harsh chemicals.
- Enzymes help maintain pH and Alkalinity.
- Clean your filter often to remove suspended solids and oils that Enzymes dislodge.
- Purge your hot tub twice per year with one of our awesome purge products.
- Contact us to find out more on purging, filters and water care.

Save our Earth and Your Body!

Soak in Organic Enzymes
Not Heavy Chemicals

Reduce Chlorine and Bromine Use

This product is Environmentally Friendly
And can be used with all APPROVED Sanitizers

Sauvez Notre Terre Et Votre Corps!

Prenez un Bain avec des Enzymes Organiques
Pas de Produits Chimiques en abondance

Réduit l'utilisation de Chlore et Brome

Ce produit est Écologique Et peut-être utilisé avec tout Désinfectants APPROUVÉS

Joignez-vous à la Révolution du Maintien de l'Eau Chaude Naturelle!

Tout Organique

- Les Enzymes Master Radiance sont complètement organiques avec aucun additifs, lanoline ou autres substances chimiques étrangères.
- Utilisez les Enzymes toutes les semaines afin de maintenir un bon processus d'oxydation.
- Le plus souvent que vous utilisez les Enzymes, le moins souvent que vous aurait besoin de produits chimiques agressifs.
- Les Enzymes aident à maintenir le pH et l'Alcalinité.
- Nettoyez votre filtre souvent afin de retirer les solides suspendus et l'huile que les Enzymes délogent.
- Faites la purge de votre spa deux fois par année avec nos produits de purge étonnants.
- Contactez-nous pour en savoir plus sur la purge, les filtres et le soin de l'eau.

p.73

ECO FRIENDLY
ECO FRIENDLY
ECO FRIENDLY

NON-IRRITATING • ELIMINATES SCUM
MINIMIZES CHEMICAL ODOR
NON-FOAMING • NON-HAZARDOUS
NON-TOXIC • NON-FLAMMABLE

NON IRRITANT • ÉLIMINE L'ÉCUME
MINIMISE L'ODEUR CHIMIQUE
NON MOUSSANT • INOFFENSIF
NON TOXIQUE • ININFLAMMABLE

ELM Engineering Logistics Marketing
Tel. 888.502.6960
www.elmsalesandequipment.com
6580 Davand Dr. Unit 1 · Mississauga, ON · L5T 2M3 · Canada

...naturellement, d'ELM

©2018

TERMS & CONDITIONS

THIS CATALOGUE SUPERSEDES ALL PREVIOUS EDITIONS

PRICES

Prices are subject to change without notice.
Prices on ELM Dealer Portal supersede Catalogue prices.

TERMS

C.O.D or pre-paid; Net 30 days on approved credit; 2.0% per month finance charge on past due accounts; Visa, MasterCard, Direct Debit card accepted; ELM does not accept personal cheques; A $50.00 service charge will be assessed on all returned N.S.F. cheques to cover bank fees and handling. Minimum Order $25.00

SHIPPING & HANDLING

Pick-up

Order pick-up is always welcome with at least 2 hours notice

Shipping

Shipping will be prepaid by ELM for orders over $200.00 before taxes, destined to Industry Retailers & Technicians in Manitoba, Ontario, Quebec and the Eastern Provinces. Exception: Steps and Spa Covers.
All items will be shipped standard courier ground service (typically next day delivery) . Should you require guaranteed next day service, specify a particular courier company, or request any shipment method other than the standard courier ground service offered by ELM, additional charges will apply.
ELM does not ship COD

COMPONENT IDENTIFICATION

Try to match the part or component as closely as possible to the picture and description in the catalogue. If you are still unsure of the application, fax a drawing/photocopy of the part, or e-mail a digital picture along with dimensions and a brief description of the application and we'll do our best to try and help you with identification. You may also send us the part and we will attempt to match it for you. If it turns out that the item is no longer available, we will attempt to cross-reference to another available item.

ORDER & PAYMENT PROCESS

Please be sure to include:

Purchase Order Number (PO#) or Order Reference Number/Name
Catalogue Part Number(s) & Description(s)
Type/brand/serial number/model of equipment
Product markings or codes if relevant

ELM will process the order as follows:
Credit Card Orders: your order will be converted into a Prepaid Order Form and faxed back to you for confirmation, credit card number and signature. Once the completed and signed Prepaid Order Form has been faxed back to ELM, the order & payment will be processed before shipping.
C.O.D. and Direct Debit Card: accepted for in-house pick-ups only. Order confirmation will be faxed to you for approval and must be signed and faxed back to ELM before the order is prepared. Payment will be processed at time of pick-up.
Pre-approved Term Accounts: order confirmation will be faxed to you for approval and must be signed and faxed back to ELM before the order is processed & shipped. Payment due per terms of Account.
Special Orders: must be prepaid in full; non-cancellable; lead-times vary

©2018

TERMES & CONDITIONS

CE CATALOGUE REMPLACE TOUTES ÉDITIONS PRÉCÉDENTE

PRIX

Les prix sont sujets au changement sans préavis.
Les Prix sur le Portail des Revendeurs d'ELM supplanteront les Prix du Catalogue

TERMES

COD ou prépayer; comptes de crédit approuvés sont 30 jours net. 2% par mois de frais de finance sur comptes au-delà du dû; cartes Visa, MasterCard, Débit sont acceptées. ELM n'accepte pas les chèques personnels. Un tarif de 50.00$ sera imposé à tous les chèques sans provision afin de couvrir les frais bancaire et de gestion.

CARGAISON & MANUTENTION

Ramassage

Ramassage de commande est toujours bienvenu avec au moins 2 heures d'avis.

Cargaison

Les frais d'expédition seront payés par ELM pour les commandes au dessus de 200.00$ avant les taxes, destinées aux détaillants et techniciens dans l'industrie au Manitoba, Ontario, Québec et les provinces de l'Est. Exception: Marches et Couverts. Tous les items seront envoyés par coursier de service au sol standard (livraison typiquement le lendemain). Si vous aviez besoin d'une garantie de service le lendemain, spécifiez une compagnie de coursier particulière ou demandez n'importe quelle méthode de livraison que celle de service au sol offerte par ELM, des frais additionnels seront appliqués. ELM ne fait pas d'envois COD.

IDENTIFICATION DU COMPOSANT

Essayez d'identifier les pièces ou le composant le plus prêt possible d'après la photo ou description dans le catalogue. Si vous êtes encore pas sûr de l'application de la pièce, envoyez par fax un dessin / une photocopie de la pièce, ou par courriel une photo numérique ainsi que les dimensions et une brève description de l'application de la pièce et nous ferons de notre mieux pour essayer de vous aider avec l'identification. Vous pouvez aussi nous envoyez la pièce et nous tenterons de la correspondre pour vous. Au cas que nous trouvions que l'item n'est plus disponible, nous tenterons de faire une référence croisée pour un autre item de remplacement disponible.

PROCESSUS DE COMMANDE & PAIEMENT

S'il vous plait soyez sûr d'inclure:

Numéro du bulletin d'achat ou numéro / nom de référence du bulletin
Numéro (s) de la (des) pièce (s) du catalogue & description (s)
Type / Genre / numéro de série / modèle de l'équipement
Marques ou code de produit qui à rapport.

ELM fera le processus ainsi:
Commandes avec Carte de Crédit: Votre commande sera convertie en un bulletin de commande prépayé et faxez de retour à vous pour la confirmation, numéro de carte de crédit et signature. Une fois le bulletin rempli et signé et renvoyé à ELM, la commande et le paiement seront procédé avant l'envoie.
COD et Carte de Débit: Accepter pour le ramassage sur champ seulement. La confirmation sera faxée à vous et doit être signer et faxer de retour à ELM avant que la commande soit préparée.
Comptes à Terme Pré-approuver: La confirmation de la commande sera faxée pour votre approbation et devra être signé et faxer de retour à ELM avant que le processus et l'envoie de la commande soient fait. Paiement dû d'après les termes sur le compte.
Commande Spéciale: Doit être prépayer entièrement; ne peut-être annulée, délai de livraison variable.

©2018
p: 905.670.5387 f: 905.670.5389 t: 888.502.6960 info@elmsalesandequipment.com

PRODUCT RETURN

PRODUCT RETURN PROCESS

1. Customer contacts ELM for a Return Authorization Number (RA#)
2. ELM will fax or e-mail the RA# on an *Authorization to Return Goods* form
3. Customer completes *Authorization to Return Goods* form, including as much detail about the problem as possible and whether a Warranty Inspection and/or Repair Estimate are required, and faxes or e-mails it back to ELM
4. Customer properly packages product to be returned and clearly indicates the RA# in LARGE print on the outside of the parcel and on the packing slip
5. A copy of the original ELM invoice must accompany each product return
6. Proof of installation (a service invoice) by a qualified Pool/Spa Industry professional must be submitted with the claim. Manufacturer will not warranty without proof of installation by a qualified installer.

IMPORTANT

- Product must be returned within 30 days
- Return product will not be accepted without an RA#
- ELM will not be held responsible for product returns that have been damaged or lost in shipping. You will be notified if the shipment is received damaged. You must make a claim directly with the shipping company
- Collect shipments will not be accepted
- ELM reserves the right to limit the quantity of items that may be returned
- Product returned from outside of Canada: shipper is responsible for all Customs, Duties, taxes and any other related charges where applicable

UNWANTED/UNUSED PRODUCT

For product ordered in error, or no longer required.
Unwanted/Unused product may be returned solely at the discretion of ELM and is subject to the following conditions:

1. Product that has been accepted for return will be subject to a 25% re-stocking fee charged to the returnee
2. Product must be in the original packaging and suitable for resale as determined by ELM. Damaged, soiled or otherwise marked product and/or packaging, or product that has been installed, will be returned to sender at the sender's expense
3. Special order product may not be returned under any circumstance
4. Product must be returned within 30 days of purchase

If the product intended for return to ELM meets these conditions, then follow the instructions above under *Product Return Process*

PRODUCT SHIPPED IN ERROR

Should incorrect product be shipped in error, contact ELM immediately upon receipt and an RA# will be issued per the *Product Return Process*.
We pay for the shipping…
If we make a shipping error, we will pay for the shipping to return the incorrect product to ELM and ship the correct item at our expense via our normal standard courier ground service.
You pay for the shipping...
If the wrong product is received, and was ordered without a specific part number, or we attempted to help you match it to a similar item at your request, then it will be the responsibility of the receiver to return product to ELM via pre-paid shipping.

IN-HOUSE DIAGNOSTIC TESTING & REPAIR FACILITY

ELM provides in-house diagnostic and repair of all brands of spa packs and related hot tub equipment. To use this valuable service, follow the instructions above under *Product Return Process.* Bench fee: $50.00 - includes set-up evaluation and diagnostic. Labour fee: $50.00/hr for all repairs, minimum 1 hour charge.

©2018

RENVOI DE PRODUIT

PROCESSUS DE RENVOI DE PRODUIT

1. Le client contacte ELM pour un numéro d'autorisation de retour (RA)
2. ELM enverra soit par fax ou par courriel le numéro de RA sur un formulaire de retour
3. Le client remplie le formulaire en incluant autant de détails que possible à propos du problème et aussi si c'est soit une inspection de garantie et / ou une évaluation de réparation et soit par fax ou courriel le renvoie à ELM
4. Le client emballe correctement le produit pour être retourner et clairement indique le numéro de RA en large caractères sur l'extérieur du colis et sur le bordereau d'expédition.
5. Une copie originale de la facture d'ELM doit accompagner chaque produit de retour
6. Preuve d'installation (facture de service) par un professionnel qualifié dans l'industrie de Piscine/Spa doit être soumise avec la réclamation. Le manufacturier n'honorera pas la garantie sans preuve d'installation par un installateur qualifié.

IMPORTANT

- Le produit doit être retourné dans les 30 jours après l'achat
- Un produit retourné sans RA ne sera pas accepter
- ELM ne sera pas responsable de produit reçu endommager ou perdu durant l'expédition. Nous vous le ferons savoir immédiatement si la livraison est reçue endommagée. Vous devrais faire une réclamation directement avec la compagnie d'expédition
- Les livraisons avec demande de paiement seront refusées
- ELM réserve le droit de limité la quantité de produit qui peut être retourné
- Produit retourné de dehors du pays : l'expéditeur est responsable les frais applicables de douanes, fonctions, taxes et tout autres frais relier

PRODUIT NON DÉSIRÉ /INUTILISÉ

Pour produit commandé en erreur ou qui n'est plus requis.
Produit non Désiré /Inutilisé pourra être retourné a la discretion d'ELM et est sujet aux prochaines conditions:

1. Le produit qui a été accepté pour un retour sera sujet à 25% de frais de réapprovisionnement qui sera retiré du paiement dû au client
2. Produit doit être dans son emballage original et qui peut être revendu tel que déterminer par ELM. Les produits et/ou les emballages endommagés, sales ou avec toutes autres taches ainsi que ceux qui ont été installés seront retournés et l'expéditeur sera responsable pour le coût de l'expédition
3. Les commandes particulières ne peuvent pas être retournées en aucun cas
4. Le produit doit être retourné dans les 30 jours après l'achat

Si le produit intentionné pour le retour satisfait les conditions d'ELM, suivez les instructions ci-dessus sous le *Processus de Renvoi de Produit*

PRODUIT ENVOYÉ EN ERREUR

Si un produit incorrect a été envoyer en erreur, contactez ELM dès que reçu et un formulaire de RA sera fait d'après le *Processus de Renvoi de Produit*.
Nous payons les frais d'expédition....
Si nous avons fait une erreur, nous payerons les frais d'expédition pour le retour du produit incorrect et nous enverrons le correct produit à nos frais par coursier de service au sol standard.
Vous payez les frais d'expédition....
Si le produit reçu ne convient pas et a été commander sans numéro de pièce ou nous avons essayé de vous aider à le correspondre à un item similaire à votre demande, alors ça sera la responsabilité du receveur de renvoyer le produit à ELM par expédition prépayée.

TEST DIAGNOSTIQUE INTERNE & SERVICE DE RÉPARATION

ELM pourvoit le diagnostique interne et réparation pour toutes marques de spa pak et équipement de hot tub relié. Afin d'utiliser ce service de valeur, suivez-les instructions ci-dessus sous le *Processus de Renvoi de Produit*. Frais de banc d'essai: 50.00$ - inclus le montage, évaluation et le diagnostique. Frais de main d'œuvre: 50.00$ à l'heure pour toutes réparations, un coût minimum d'une heure s'applique.

©2018
p: 905.670.5387 f: 905.670.5389 t: 888.502.6960 info@elmsalesandequipment.com

WARRANTY

IMPORTANT

ELM does not directly warrant other manufacturer's product, but will do everything possible to assist you should a claim be required. Always be sure to review the manufacturer's warranty card for details.

PRODUCT FAILURE ON INSTALLATION

If the product was installed correctly and failed immediately upon installation, then it is usually (but not always) a manufacturing defect.

PROCESS

1. Contact ELM immediately for an RA#
2. ELM will fax or e-mail the RA# on an *Authorization to Return Goods* form
3. Customer completes *Authorization to Return Goods* form, including as much detail about the problem as possible , and faxes or e-mails it back to ELM
4. Customer properly packages product to be returned and clearly indicates the RA# in LARGE print on the outside of the parcel and on the packing slip
5. A copy of the original ELM invoice must accompany each product return
6. Proof of installation (a service invoice) by a qualified Pool/Spa Industry professional must be submitted with the claim. Manufacturer will not warranty without proof of installation by a qualified installer.
7. **Return product to ELM via pre-paid shipping**
8. Should the OEM determine that the failure is due to a manufacturing defect, ELM will reimburse the original shipping charges.
9. If after evaluation and testing there is no fault found, product will be shipped back to sender at their expense.

PRODUCT FAILURE DURING OEM WARRANTY PERIOD

Review the OEM warranty policy to determine if the product is under warranty. If the product falls within the warranty period and appears to be a legitimate claim*, proceed as indicated.

1. Contact ELM for an RA#
2. ELM will fax or e-mail the RA# on an *Authorization to Return Goods* form
3. Customer completes *Authorization to Return Goods* form, including as much detail about the problem as possible , and faxes or e-mails it back to ELM
4. Customer properly packages product to be returned and clearly indicates the RA# in LARGE print on the outside of the parcel and on the packing slip
5. A copy of the original ELM invoice must accompany each product return
6. Proof of installation (a service invoice) by a qualified Pool/Spa Industry professional must be submitted with the claim. Manufacturer will not warranty without proof of installation by a qualified installer.
7. **Return product to ELM via pre-paid shipping**
8. Upon receipt, ELM will forward the product to the Original Equipment Manufacturer (OEM) for evaluation
9. Credit, replacement or repair is solely at the discretion of the OEM. Freight and labour is not covered.

Note that due to product date codes, it is in your best interest to return the product to ELM without delay.

*legitimate claim does not include failure due to chemical abuse, water intrusion, voltage spike, failure of another component or any external reason other than a manufacturing defect

LABOUR REIMBURSEMENT

When applicable , labour off-set charge is reimbursed according to the Original Equipment Manufacturer product warranty policy. Please review the OEM warranty to determine if they offer a labour reimbursement before contacting ELM.

©2018

GARANTIE

IMPORTANT

ELM ne garanti pas directement les produits d'un autre manufacturier, mais fera son possible de vous aider si une réclamation est requise. Assurez vous toujours d'examiner la carte de garantie du manufacturier pour les détails.

DÉFAILLANCE DU PRODUIT SUR L'INSTALLATION

Si le produit a été correctement installer et faille immédiatement sur l'installation, c'est d'habitude (mais pas toujours) un défaut de manufacture.

PROCESSUS

1. Contacter ELM immédiatement pour un numéro de RA (retour autorisé)
2. ELM vous faxera ou enverra par courriel le numéro du RA sur le bulletin *d'Autorisation de Retour de Produit*
3. Le client rempli le bulletin en incluant autant de détails que possible à propos du problème et soit par fax ou courriel, le renvoie à ELM
4. Le client emballe correctement le produit pour être retourner et clairement indique le numéro de RA en large caractères sur l'extérieur du colis et sur le bordereau d'expédition
5. Une copie de la facture originale doit accompagner chaque produit de retour
6. Preuve d'installation (facture de service) par un professionnel qualifié dans l'industrie de Piscine/Spa doit être soumise avec la réclamation. Le manufacturier n'honorera pas la garantie sans preuve d'installation par un installateur qualifié.
7. **Renvoyez le produit à ELM par expédition prépayée**
8. Si le manufacturier détermine que la faille est due à un défaut de manufacture, ELM vous remboursera les frais originaux d'expédition et vous approvisionnera la valeur entière du produit
9. Si après l'évaluation et le test aucune erreur est trouvée, le produit sera retourné au client à leur frais.

DÉFAILLANCE DU PRODUIT DURANT LA PÉRIODE DE GARANTIE DU MANUFACTURIER (OEM)

Examinez la police d'assurance de garantie afin de déterminer si le produit est encore sous garantie. Si le produit est encore sous garantie et démontre une déclaration légitime*, faites le processus tel qu'indiqué.

1. Contacter ELM immédiatement pour un numéro de RA (retour autorisé)
2. ELM vous faxera ou enverra par courriel le numéro du RA sur le bulletin *d'Autorisation de Retour de Produit*
3. Le client rempli le bulletin en incluant autant de détails que possible à propos du problème et soit par fax ou courriel, le renvoie à ELM
4. Le client emballe correctement le produit pour être retourner et clairement indique le numéro de RA en large caractères sur l'extérieur du colis et sur le bordereau d'expédition
5. Une copie de la facture originale doit accompagner chaque produit de retour
6. Preuve d'installation (facture de service) par un professionnel qualifié dans l'industrie de Piscine/Spa doit être soumise avec la réclamation. Le manufacturier n'honorera pas la garantie sans preuve d'installation par un installateur qualifié.
7. **Renvoyez le produit à ELM par expédition prépayée**
8. Une fois reçu, ELM expédiera le produit au manufacturier original du produit pour une évaluation
9. Remboursement, remplacement ou réparation est entièrement à la discrétion du manufacturier. Ne s-applique pas à la livraison et main-d'oeuvre.

Notez qu'à cause de la date inscrite sur le produit, c'est dans vos meilleurs intérêts de renvoyer le produit à ELM sans délai.

*une déclaration légitime n'inclus pas la faille due à l'abus de produits de chimie, intrusion d'eau, augmentation de voltage, la faille d'un autre composant ou toute autre raison externe que celle d'un défaut de manufacture

REMBOURSEMENT DE MAIN-D'OEUVRE

Les frais de compensation de main-d'œuvre seront remboursés d'après la police d'assurance de garantie de produit du manufacturier. S'il vous plait veuillez examiner la garantie du manufacturier (OEM) afin d'établir s'ils offrent un remboursement de main-d'œuvre avant de contacter ELM.

©2018
p: 905.670.5387 f: 905.670.5389 t: 888.502.6960 info@elmsalesandequipment.com

FAX ORDER FORM

ELM SALES & EQUIPMENT INC.
6580 Davand Dr. Unit 1 · Mississauga, ON · L5T 2M3 · Canada

t: 905.670.5387
f: 905.670.5389
www.elmsalesandequipment.com

ELM ENGINEERING LOGISTICS MARKETING

Spa Parts & Accessories Specialists

Fax to: 905.670.5389

ELM EXPRESS PARTS ORDER FORM

Date:_____ Purchase Order#:_____
From: _____ (name of person placing order)
Company Name:_____
Address:_____
Fax:_____ Phone:_____
E-mail:_____

PART NO.	DESCRIPTION	QTY.	PRICE	NOTES

www.elmsalesandequipment.com

FAX DE BULLETIN DE COMMANDE

ELM SALES & EQUIPMENT INC.
6580 Davand Dr. Unit 1 · Mississauga, ON · L5T 2M3 · Canada

t: 905.670.5387
f: 905.670.5389
www.elmsalesandequipment.com

ELM ENGINEERING LOGISTICS MARKETING

Spécialistes de Pièces de Spa & d'Accessoires

Faxez au: 905.670.5389

BULLETIN de COMMANDE de PIÈCE EXPRESS d'ELM

Date:_____No. de Bon de Commande:_____
De:_____(nom de la personne qui place la commande)
Nom de la Compagnie:_____
Adresse:_____
Fax:_____Téléphone:_____
Courriel:_____

No. de la PIÈCE	DESCRIPTION	QTÉ.	PRIX	NOTES

www.elmsalesandequipment.com

TABLE OF CONTENTS

ACCESSORIES
- COVER LIFTERS 145-146
- STEPS 148
- PILLOWS - SPA & BATH, UNIVERSAL 147
- SPA VACUUMS & SPA DRAIN 77
- DISPENSERS, TABLET, FLOATING 75
- THERMOMETERS, FLOATING 75

AIR BUTTONS 118

AIR CONTROLS 138

AIR SWITCHES - SPDT / DPDT 40

AROMATHERAPY / FRAGRANCES - SPAZAZZ 70-72

AUDIO/VIDEO POWER SUPPLY & SPEAKERS 40

BALBOA, PC BOARDS 12-14

BARB FITTINGS / ADAPTERS 62

BASE, EQUIPMENT 117

BEARINGS, MOTOR 117

BLOWERS & INJECTORS, AIR 118

BRETT AQUALINE - CONTROLLERS / PCBs / SENSORS 24

BROMINE GENERATOR - GENESIS 68

CABLES & CORDS - J&J / AMP / GECKO 42

CABLES - for TOPSIDE CONTROL PANELS / CONTROLLERS
- BALBOA 15
- CTI/ELM 7
- GECKO 21
- UNITED SPA CONTROLS 22

CAPACITORS, MOTOR 117

CHEMICALS - SANITIZERS & WATER BALANCE PRODUCTS 73-74

CHECK VALVES 144

CLAMPS - GEAR / SPRING / CINCH 66

CLEANING PRODUCTS 76-77

CONTROLLERS / TOPSIDE CONTROL PANELS
- BALBOA 9-11
- BRETT AQUALINE 24
- CTI/ELM 3-5
- GECKO 17-18
- HYDROQUIP 23
- LEN GORDON 8
- SPA BUILDERS 24
- SUNDANCE 23
- TECMARK 8
- UNITED SPA CONTROLS 22

CONTROL PANEL ADAPTER PLATES 8

CTI/ELM, PC BOARDS 6

COVERS & COVER LIFTERS 145-146, 148

DISPENSERS - CHEMICAL, FLOATING 75

DIVERTER VALVES - 1.0in & 2.0in 139-140

ELECTRICAL
- AMP CONNECTORS & TOOLS 41
- CRIMP TERMINALS & CONNECTORS 41
- CIRCUIT BREAKER - MINI PANEL MOUNT 43
- FUSES & FUSE HOLDERS 43
- PILOT LIGHTS & PANEL BACK-LIGHTS 39
- RELAYS & CONTACTORS 38
- SWITCHES, LATCHING - SPDT / DPDT 40
- TERMINAL BLOCKS & GROUND LUGS 39
- CAPACITORS, MOTOR 117

ELECTRONIC SPA CONTROLS ..... see SPA PAKS

ELEMENTS, HEATER HARDWARE
- BOWTIE 55
- COIL 55
- HAIRPIN 56
- NPT 56
- HEATER HARDWARE - HTR WIRES/STRAPS 55

ERROR CODES, SPA PAKS - TECHNICAL REFERENCE 25-33

FILTER CARTRIDGES
- MASTER DELUXE 80-82
- FILBUR 83-85
- SPECIALTY FILTERS & FILTER ADAPTERS 86
- PRE-FILTER, CARBON BLOCK 86
- HOW TO MEASURE A FILTER CARTRIDGE 85

FILTER CARTRIDGE CLEANING TOOLS 75

FILTERS & SKIM FILTERS
- WATERWAY 87-88
- RAINBOW (PENTAIR) 89

FILTER PARTS
- WATERWAY 90-92
- RAINBOW (PENTAIR) 93-94

FLOW SWITCHES 36

FUSES 43

GASKETS / O-RINGS 54, 99

GECKO, PC BOARDS 20

GFCIs 44

©2018

TABLE OF CONTENTS

GLUE, PRIMER, SEALANTS & ADHESIVES 67

HEATER BUTTRESSES & TAILPIECES 54, 99

HEATER MANIFOLD ASSEMBLIES
- BALBOA 47
- CTI/ELM 46
- GECKO 46
- SPA BUILDERS 49
- FLOW-THRU, OEM 48-49
- LOW-FLOW, OEM - LAING TUBE STYLE 50-51
- LOW-FLOW, OEM - VERTICAL 52-53

HEATER MANIFOLD PARTS 54, 97-99

HEATER ELEMENTS ..... see ELEMENTS, HEATER HARDWARE

HEAT JACKET SYSTEM - BALBOA 16

HIGH-LIMITS - MECHANICAL 34

HOSE, PIPE & TUBING - PVC & VINYL 66

IMPELLERS
- WATERWAY 108
- AQUA-FLO 109
- ULTRA JET / STA-RITE / PENTAIR 109

JETS & JET PARTS
- WATERWAY 119-128
- AMERICAN PRODUCTS 129-130
- HYDRO AIR 131-133
- CMP (CUSTOM MOLDED PLASTICS) 134-135
- RISING DRAGON 135-136
- SPECIALTY JETS/WATER FEATURES/EYEBALLS 137

LEN GORDON - PC BOARDS 24

LIGHTS - LED INDICATORS / PANEL BACKLIGHTS 39

LIGHTS - SPA / HOUSINGS / **SLOAN LEDs & CONTROLLERS** 45

LUBRICANTS - O-RING / GASKET 54, 99

MAINTENANCE PRODUCTS
- PIPE CLEANER / FLUSH 76
- CARTRIDGE CLEANER, FILTER 76
- CARTRIDGE CLEANING TOOLS, FILTER 75
- FIX-A-LEAK 67
- ACRYLIC POLISH / VINYL CONDITIONER 76
- PRE-FILTER, CARBON BLOCK 86
- TEST STRIPS 69
- SPA VACUUMS & DRAINS 77
- PLUMBING PURGE/JET CLEANER - AHH-SOME 73
- MINERAL CARTRIDGE - NATURE2 73

MANIFOLDS - WATER / AIR 64-65

MOTOR PARTS - BEARINGS / CAPACITORS 117

NATURAL WATER CARE 73

O-RINGS / GASKETS 54, 99

OZONATORS & PARTS 68

PC BOARDS
- BALBOA 12-14
- CTI/ELM 6
- GECKO 20
- UNITED SPA CONTROLS 22
- SPA BUILDERS 24
- BRETT AQUALINE 24
- LEN GORDON 24
- HYDROQUIP 23
- WATKINS 23

PILLOWS - SPA & BATH UNIVERSAL 147

PLUGS & RECEPTACLES - J&J / AMP / GECKO 42

POWER SUPPLY - AUDIO/VIDEO 40

PUMPS
- CIRCULATION - LAING / GRUNDFOS / WWAY 104-105
- GALAXY - AQUA-FLO REPLACEMENTS 103
- WATERWAY 100-101
- ULTRA JET / STA-RITE / PENTAIR 102
- BATH - GENESIS, WOW 105

PUMP SEALS & PARTS
- PUMP SEALS 110
- WATERWAY 111-112
- ULTRA JET - ULTIMA 113
- ULTRA JET (PENTAIR) - ULTIMAX 114
- STA-RITE - DURAJET 114
- AQUA-FLO 115-116
- MISC. - LEAF TRAP, ANTI-VIBRATION, BASES 117

PRESSURE, FLOW & VACUUM SWITCHES 36

PVC FITTINGS, SCH40 WHITE 57-63

PVC FITTINGS, REPAIR - SNAPSEALS/SPLITNUTS/EXTENDERS 63

RELAYS & CONTACTORS 38

SENSORS
- CTI/ELM 7
- BALBOA 15
- GECKO 21
- UNITED SPA CONTROLS 22
- WATKINS 23
- SUNDANCE 23
- SPA BUILDERS 24
- BRETT AQUALINE 24

SKIMMERS 88

©2018

TABLE OF CONTENTS

SPA BUILDERS (SBSG) - CONTROLLERS / PCBs / SENSORS **24**

SPA PAKS, ELECTRONIC **1-22**

SPA PAKS, ERROR CODES - TECHNICAL REFERENCE **25-33**

SPA PAKS, MECHANICAL **2**

SPA PAKS / REPLACEMENT CONTROL SYSTEMS
- BALBOA **16**
- CTI/ELM **1-2**
- GECKO **19-20**
- UNITED SPA CONTROLS **22**

SPEAKERS, POP-UP **40**

SPLIT NUTS - HEATER & PUMP **54, 97**

STEPS, SPA **148**

SUCTIONS & SUCTION FITTINGS **95-97**

TEST STRIPS **69**

THERMOMETER, FLOATING **75**

THERMOSTATS - MECHANICAL / ELECTRONIC **34**

THERMOWELLS **35**

TIMERS, MECHANICAL **39**

TOOLS, SERVICE - HAND TOOLS, JET TOOLS **41, 78-79**

TRANSFORMERS - BALBOA / CTI / GECKO / SPA BUILDERS **37**

ULTRAVIOLET (UV) SYSTEM **68**

UNIONS / TAILPIECES / BUTTRESSES / ADAPTERS **98-99**

VACUUM SWITCHES **36**

VACUUMS, SPA **77**

VALVES & VALVE PARTS
- DIVERTER - 2.0IN & 1.0IN **139-140**
- ON/OFF **140**
- KNIFE/GATE **142**
- BALL **143**
- DRAIN/FILL **144**
- CHECK **144**
- HOSE BIBBS **144**

WATER CARE
- ENZYME WATER TREATMENT - MASTER RADIANCE **73**
- PLUMBING PURGE/JET CLEANER - AHH-SOME **73**
- MINERAL CARTRIDGE - NATURE2 ..... **73**
- BACTERIA TESTERS **69**
- TEST STRIPS **69**
- BROMINE WATER TREATMENT **74**
- BROMINE TABLETS **74**
- SODIUM BROMIDE - LIQUID, CRYSTAL **74**
- CHLORINE **74**
- FRAGRANCES / AROMATHERAPY **70-72**
- PH UP / PH DOWN **74**
- DEFOAMER **74**
- PRE-FILTER, CARBON BLOCK **86**
- OZONATORS **68**
- ULTRAVIOLET **68**
- BROMINE GENERATOR - GENESIS **68**
- SPA VACCUMS **77**

WATER FEATURES / SPECIALTY JETS **137**

WET ENDS, PUMP
- WATERWAY **106**
- ULTRA JET / STA-RITE / PENTAIR **107**

Contact us if you can't find what you're looking for…

chances are we have the solution for you!

© 2018 ELM Sales and Equipment Inc.
Under copyright laws, this catalogue may not be reproduced in any form, in whole or in part, without prior written consent of ELM Sales and Equipment Inc.

Table des Matières

ACCESSOIRES
- LEVIERS 145-146
- MARCHES 148
- COUSSINS - SPA & BAIN, UNIVERSEL 147
- ASPIRATEUR de SPA / DRAIN de SPA 77
- DISTRIBUTEURS, TABLETTES, FLOTTANT 75
- THERMOMÈTRE, FLOTTANT 75

ACCOUPLEMENTS de POMPE & CORDIERS 98-99

ADAPTEURS de PANNEAU 8

ADAPTATEURS FILETÉS / RACCORDS 62

ALIMENTATION ÉLECTRIQUE & HAUT-PARLEUR D'AUDIO/VIDÉO 40

AROMATHÉRAPIE / FRAGRANCES - SPAZAZZ 70-72

ASPIRATEUR, SPA 77

ASSEMBLÉES de CHAUFFE-EAUX
- BALBOA 47
- CTI/ELM 46
- GECKO 46
- SPA BUILDERS 49
- FLUX a TRAVERS de TUYAU, OEM 48-49
- FLUX de NIVEAU à BASSE PRESSION-STYLE LAING 50-51
- FLUX de NIVEAU à BASSE PRESSION-VERTICALE ... 52-53

BALBOA, TABLEAUX de CIRCUITS 12-14

BANDES à RÉACTIF 69

BASE, ÉQUIPEMENT 117

BILLES de ROULEMENT, MOTEUR 117

BOÎTIERS, CODES D'ERREUR - RÉFÉRENCE TECHNIQUE 25-33

BOÎTIERS, ÉLECTRONIQUE 1-22

BOÎTIERS, MÉCANIQUE 2

BOÎTIERS / REMPLACEMENT de SYSTÈMES de CONTRÔLES
- BALBOA 16
- CTI/ELM 1-2
- GECKO 19-20
- UNITED SPA CONTROLS 22

BOUTONS d'AIR 118

BRETT AQUALINE -CONTRÔLEURS/TABLEAUX de CIRCUITS/SONDES . 24

CÂBLES, CONTRÔLEUR
- BALBOA 15
- CTI/ELM 7
- GECKO 21
- UNITED SPA CONTROLS 22

CÂBLES & CORDES - J&J / AMP / GECKO 42

CARTOUCHES de FILTRE
- MASTER DELUXE 80-82
- FILBUR 83-85
- CARTOUCHES de FILTRE SPÉCIALISÉES & ADAPTATEURS 86
- AVANT FILTRE, BLOCAGE de CARBONE 86
- COMMENT MESURER UN FILTRE 85

CODES D'ERREUR, BOÎTIERS - RÉFÉRENCE TECHNIQUE 25-33

COLLECTEURS - d'EAU / d'AIR 64-65

COLLES, APPRÊT, SCELLANT & ADHÉSIFS 67

CONDENSATEURS, MOTEUR 117

CONTRÔLEURS d'AIR 138

CONTRÔLE de SPA ÉLECTRONIQUE ..... voir BOÎTIERS

CONTRÔLEURS / CLAVIERS-PANNEAUX de COMMANDE
- BALBOA 9-11
- CTI/ELM 3-5
- GECKO 17-18
- UNITED SPA CONTROLS 22
- SUNDANCE 23
- HYDROQUIP 23
- SPA BUILDERS 24
- BRETT AQUALINE 24
- TECMARK 8
- LEN GORDON 8
- ADAPTEURS de PANNEAU 8

COUSSINS - SPA & BAIN, UNIVERSEL 147

CRAMPONS - ENGRENAGE/À RESORTS/CINCH 66

CTI/ELM, TABLEAUX de CIRCUITS 6

DISJONCTEURS de FUITE de TERRE 44

DISTRIBUTEURS - PRODUITS CHIMIQUES, FLOTTANT 75

ÉCLAIRAGE - INDICATEURS LED/RÉTRO-ÉCLAIRAGE du PANNEAU .. 39

ÉCLAIRAGE - SPA/ABRIS ENCASTRÉ/LED/CONTRÔLEURS 45

ÉCROU FENDU - CHAUFFE-EAU & POMPE 54, 97

ÉLÉMENTS, QUINCAILLERIE de CHAUFFE-EAU
- STYLE PAPILLON 55
- BOBINE 55
- ÉPINGLE 56
- NPT 56
- QUINCAILLERIE de CHAUFFE-EAU 55

©2018

Table des Matières

FACIÈS d'EAU / JETS SPÉCIALISÉS **137**

FILTRES & FILTRES ÉCUMOIR
- WATERWAY **87-88**
- RAINBOW (PENTAIR) **89**

FUSIBLES **43**

GECKO, TABLEAUX de CIRCUITS **20**

GÉNÉRATEUR de BROME - GENESIS **68**

HAUTE-LIMITE - MÉCANIQUE **34**

HAUT-PARLEUR, POP-UP **40**

IMPELLERS / IMPULSEURS
- WATERWAY **108**
- AQUA-FLO **109**
- ULTRA JET / STA-RITE / PENTAIR **109**

INSTALLATIONS en PVC, SCH40 BLANC **57-63**

INSTALLATIONS en PVC, RÉPARATION SPÉCIALISÉE **63**

INTERRUPTEURS d'AIR - SPDT / DPDT **40**

INTERRUPTEURS de PRESSION/FLUX /ASPIRATION **36**

JETS & PIÈCES de JET
- WATERWAY **119-128**
- AMERICAN PRODUCTS **129-130**
- HYDRO AIR **131-133**
- CMP (CUSTOM MOLDED PLASTICS) **134-135**
- RISING DRAGON **135-136**
- JETS SPÉCIALISÉS/FACIÈS d'EAU/OEIL MOULÉ **137**

JOINTS TORIQUES / JOINTS D'ÉTANCHÉITÉ **54, 99**

LEN GORDON, TABLEAUX de CIRCUITS **24**

LEVIERS & COUVERTURES **145-146, 148**

LUBRIFIANTS - JOINTS d'ÉTANCHÉITÉ / JOINTS **54, 99**

MARCHES de SPA **148**

MINUTEUR, MÉCANIQUE **39**

OUTILS de NETTOYAGE pour CARTOUCHE de FILTRE **75**

OUTILS, SERVICE - OUTILS MANUEL, OUTILS POUR JETS .. **41, 78-79**

OZONATEURS & PIÈCES **68**

PIÈCES de CHAUFFE-EAUX **54, 97-99**

PIÈCES de FILTRE
- WATERWAY **90-92**
- RAINBOW (PENTAIR) **93-94**

PIÈCES de MOTEUR-BILLES de ROULEMENT/CONDENSATEURS . **117**

POMPES
- CIRCULATION - LAING / GRUNDFOS / WWAY **104-105**
- GALAXY - REMPLACEMENTS d'AQUA-FLO **103**
- WATERWAY **100-101**
- ULTRA JET / STA-RITE / PENTAIR **102**
- BAINS - GENESIS, WOW **105**

PRISES & RÉCEPTACLES - J&J / AMP / GECKO **42**

PRODUITS CHIMIQUES-DÉSINFECTANTS & ÉQUILIBRE D'EAU **73-74**

PRODUITS ÉLECTRIQUES
- CONNECTEURS D'AMPLI & OUTILS **41**
- BORNES & CONNECTEURS DE DESERTISSAGE **41**
- DISJONCTEUR - MONTURE de MINI PANNEAU **43**
- FUSIBLES & BOÎTE à FUSIBLES **43**
- VEILLEUSES LED & PANNEAU ILLUMINEUX **39**
- RELAIS & CONTACTEURS **38**
- INTERRUPTEURS - SPDT / DPDT **40**
- BLOCS de TERMINAUX & COSSES de TERRE **39**
- CONDENSATEURS, MOTEUR **117**

PRODUITS de MAINTIEN
- NETTOYANT de TUYAU / à GRANDE EAU **76**
- NETTOYANT de CARTOUCHE de FILTRE **76**
- OUTILS de NETTOYAGE pour CARTOUCHE de FILTRE . **75**
- PRODUITS FIX-A-LEAK **67**
- CIRAGE ACRYLIQUE/ASSOUPLISSANT DE VINYLE ... **76**
- AVANT FILTRE, BLOCAGE de CARBONE **86**
- BANDES à RÉACTIF **69**
- ASPIRATEUR de SPA & DRAIN de SPA **77**
- PURGE de PLOMBERIE/ NETTOYANT de JET - AHH-SOME . **73**
- CARTOUCHE MINÉRALE - NATURE2 ..... **73**

PRODUITS de NETTOYAGE **76-77**

RELAIS & CONTACTEURS **38**

SCEAUX & PIÈCES de POMPES
- SCEAUX de POMPES **110**
- WATERWAY **111-112**
- ULTRA JET - ULTIMA **113**
- ULTRA JET (PENTAIR) - ULTIMAX **114**
- STA-RITE - DURAJET **114**
- AQUA-FLO **115-116**
- MISC. - ATTRAPE-FEUILLE, ANTI-VIBRATION, BASES **117**

SKIMMERS / ÉCUMOIRES **88**

SOINS NATURELS POUR L'EAU **73**

©2018

Table des Matières

SOINS d'EAUX
- TRAITEMENT d'EAU pour l'ENZYME- MASTER RADIANCE. 73
- PURGE de PLOMBERIE/ NETTOYANT de JET - AHH-SOME. 73
- CARTOUCHE MINÉRALE - NATURE2 73
- CONTRÔLEURS de BACTÉRIE 69
- BANDES à RÉACTIF 69
- TRAITEMENT d'EAU au BROME 74
- TABLETTES DE BROME 74
- SODIUM de BROME - LIQUIDE, CRISTAL 74
- CHLORE 74
- FRAGRANCES / AROMATHÉRAPIE..... 70-72
- PH HAUT / PH BAS 74
- ADDITIF ANTI-MOUSSE 74
- AVANT FILTRE, BLOCAGE de CARBONE 86
- OZONATEURS..... 68
- ULTRAVIOLET 68
- GÉNÉRATEUR de BROME - GENESIS 68
- ASPIRATEUR de SPA 77

SONDES
- CTI/ELM 7
- BALBOA..... 15
- GECKO..... 21
- UNITED SPA CONTROLS 22
- WATKINS..... 23
- SUNDANCE..... 23
- SPA BUILDERS 24
- BRETT AQUALINE 24

SOUFFLEURS & INJECTEURS d'AIR 118

SOUPAPES / VANNES - ANTI-RETOUR, DRAIN..... 144

SPA BUILDERS - CONTRÔLEURS/TABLEAUX de CIRCUITS/SONDES 24

SUCCIONS & PIÈCES d'INSTALLATION de SUCCIONS 95-97

SYSTÈME HEAT JACKET - BALBOA..... 16

SYSTÈME ULTRAVIOLET (UV) 68

TABLEAUX de CIRCUITS
- BALBOA..... 12-14
- CTI/ELM 6
- GECKO..... 20
- UNITED SPA CONTROLS 22
- SPA BUILDERS 24
- BRETT AQUALINE 24
- LEN GORDON 24
- HYDROQUIP 23
- WATKINS..... 23

THERMOMÈTRE, FLOTTANT 75

THERMOSTATS - MÉCANIQUE / ÉLECTRONIQUE 34

THERMOWELLS (DOIGTS de GANT THERMOMÉTRIQUE pour SONDES) 35

TRANSFORMATEURS - BALBOA / CTI / GECKO / SPA BUILDERS 37

TUYAU PVC FLEXIBLE & RIGIDE, TUBE TRANSPARENT 66

UNIONS/ABOUT-MANCHON/ADAPTEURS 98-99

VANNES & PIÈCES POUR VANNE
- VANNE DIRECTIONNELLE - 2.0PO & 1.0PO 139-140
- INTÉRUPTEUR MARCHE-ARRÊT 140
- VANNE GUILLOTINE/ ROBINET 142
- SOUPAPE DE VIDANGE..... 143
- DRAINAGE/REMPLISSAGE 144
- SOUPAPE ANTIRETOUR..... 144
- BAVOIR DE TUYAU 144

WET ENDS, POMPES (CORPS d'ASPIRATION et de REFOULEMENT)
- WATERWAY 106
- ULTRA JET / STA-RITE / PENTAIR..... 107

Contactez nous si vous ne trouvez pas ce dont vous recherchez...

par hazard nous pourrions avoir une solution pour vous!

© 2018 ELM Sales and Equipment Inc.
Sous les lois du copyright, ce catalogue ne peut être reproduit en aucun format, soit en entier ou en part, sans le consentement préalable d'ELM Sales and Equipment Inc.

MINI MAX DIGITAL SPA PAKS

BOÎTIERS MINI MAX DIGITAL

SPA PAKS - CTI - MINI MAX DIGITAL

CTI/ELM **Topside Panels** - p. 3-5

PN# **1-637G-TB13** MODEL **B22404CM** PCB REV# **r59** or **r96**

FEATURES P1-2spd, P2-1spd, circ pump, blower, 4.0KW, 12V Light Cord, Ozone Receptacle, J&J Mini Receptacles, 240V/120V convertible, miss-wire fuse protection

USES TOPSIDE r59: **1-628B-S** CONFIG Jet, Aux, Light, Heat
r96: **1-628-MS** CONFIG Jet1, Light, Blower, Jet2, Aux, Heat, Invert (above Light)

PN# **1-637G-TB15** MODEL **B22404CM** PCB REV# **r59** or **r96**

FEATURES P1-2spd, P2-1spd, circ pump, blower, 4.0kW, 12V Light Cord, Ozone Receptacle, J&J Mini Receptacles, 240V/120V convertible, miss-wire fuse protection

USES TOPSIDE r59: **1-628B-S** CONFIG Jet, Aux, Light, Heat
r96: **1-628-MS** CONFIG Jet1, Light, Blower, Jet2, Aux, Heat, Invert (above Light)

PN# **1-637G-TB1555** MODEL **224055CM** PCB REV# **r59**

FEATURES P1-2spd, P2-1spd, circ pump, blower, 5.5kW, 12V Light Cord, Ozone Receptacle, J&J Mini Receptacles, 240V/120V convertible, miss-wire fuse protection

USES TOPSIDE r59: **1-628B-S** CONFIG Jet, Aux, Light, Heat

PN# **1-637A** MODEL **12404M** PCB REV# **r59**

FEATURES P1-2spd, 4.0kW, 12V Light Cord, Ozone Receptacle, J&J Mini Receptacles, 240V/120V convertible, miss-wire fuse protection

USES TOPSIDE r59: **1-628B-S** CONFIG Jet, Aux, Light, Heat

PN# **1-637J** MODEL **124055M** PCB REV# **r59**

FEATURES P1-2spd, 5.5kW, 12V Light Cord, Ozone Receptacle, J&J Mini Receptacles, 240V/120V convertible, miss-wire fuse protection

USES TOPSIDE r59: **1-628B-S** CONFIG Jet, Aux, Light, Heat

PN# **1-637HS-T** MODEL **B224055M** PCB REV# **r75b**

FEATURES P1-2spd, P2-1spd, blower, 5.5kW, 12V Light Cord, Ozone Receptacle, LED Diagnostics, J&J Mini Receptacles, 240V/120V convertible, miss-wire fuse protection

USES TOPSIDE r75b: **1-628-MS2** CONFIG Jet, Aux, Light, Heat up, Heat down, Invert

IMPORTANT - when ordering, please specify:
1. **choice of topside control model & PCB REV#**
2. **sensor type & application - wet sensor well or dry sensor well and 3/8" or 1/4" sensor**
3. **heater orientation**

IMPORTANT - quand vous commandez, svp spécifiez:
1. **choix de clavier & REV# du PCB**
2. **type de sonde & application - capteur sec pour sonde ou capteur mouillé pour sonde est de 3/8" ou 1/4"**
3. **l'orientation du chauffe-eau**

©2018

made in / fabriqué au Canada

SPA PAKS - Mechanical Series

...Very Tough, Very Simple, Very Reliable...

...Très Solide, Très Simple, Très Fiable...

Hydro Pak Mechanical

PN# **1-633P-T** MODEL **Hydro Pak L112015H**

One Pump, Light, **120V**, 1.5KW, no timer, Ozone Receptacle, J&J Mini Receptacles
SIZE: **17.0"W x 10.0"H x 6.0"D**; overall dimension includes heater tail-pieces

PN# **1-633FB** MODEL **Hydro Pak L124055H**

One Pump, Light, **240V** 5.5KW, no timer, Ozone Receptacle, J&J Mini Receptacles
SIZE: **17.0"W x 10.0"H x 6.0"D**; overall dimension includes heater tail-pieces

PN# **1-633K-TC** MODEL **Hydro Pak 12404GH**

One Pump, **240V**, 4KW, GFCI, 120V, Hot rec for light kit, no timer, Ozone Receptacle, J&J Mini Receptacles
SIZE: **17.0"W x 10.0"H x 6.0"D**; overall dimension includes heater tail-pieces

PN# **1-633M-TC** MODEL **Hydro Pak L12404H**

One Pump, Light, **240V**, 4KW, no timer, Ozone Receptacle, J&J Mini Receptacles
SIZE: **17.0"W x 10.0"H x 6.0"D**; overall dimension includes heater tail-pieces

REPLACE MOST MECHANICAL SPA PAKS!

REMPLACE LA PLUPART DES BOÎTIERS MÉCANIQUES!

p: 905.670.5387 f: 905.670.5389 t: 888.502.6960 info@elmsalesandequipment.com
©2018

TOPSIDE PANELS - CTI - MINI MAX DIGITAL

MINI MAX RECTANGLE 2-1/8"x 5-1/4"

CTI/ELM **Mini Max Spa Paks** - p. 1

ITEM	TOPSIDE PN#	PCB model	REV#	APPLICATION	NOTES
	Works only with PCB model...		Fonctionne seulement avec PCB modèle...		
	1-628B-S3	4-10-1503D59D*	R59	CTI (Limited quantities)	Jet, Light, Heat; **sub with 1-628B-S**
1	1-628B-S	4-10-1503D59D	R59	Generic	Jet, Aux, Light, Heat
1	1-628-PPS	4-10-1503D59D	R59	Generic	**sub with 1-628B-S**
2	1-630RS	4-10-1503D87	R87	Orca Bay	**sub with 1-628B-S*** * must change chip on PCB to R59D
3	1-628-MS2	4-10-1503D75B	R75B	Aruba; Hydro Spa; Alps	**Replaces 1-630-U; 1-630V; 1-630VA; 1-630VAS 1-630BS** Jet, Aux, Light, Heat-up, Heat-down, Inv
	1-628-MS2	4-10-1503D80	R80	Ingenious; HydroWave ; IP15	Jet, Aux, Light, Heat-up, Heat-down, Inv
4	1-630PS	4-10-1503D59D	R59	Strong	Jet, Aux, Light, Heat; **sub with 1-628B-S**
5	1-628C	4-10-1503D59D	R59	Pacific	Jet, Aux, Light, Heat; **sub with 1-628B-S**
6	1-628AS	4-10-1503D59D	R59	Aqua Spa	Jet, Aux, Light, Heat; **sub with 1-628B-S**
7	1-630Q7S	4-10-1503D79	R79	Ingenious Products IP-20	Jet, Light, Aux, Jet2, Heat-up, Heat-down, Inv (above light)

1

2

3

4

5

6

7

* supersedes R59C and all previous revisions

MINI MAX RAISED OVAL 2-1/2"x 7-3/4"

NO LONGER AVAILABLE

ITEM	TOPSIDE PN#	PCB model	REV#	APPLICATION	NOTES
	Works only with PCB model...		Fonctionne seulement avec PCB modèle...		
1	1-628E	4-10-1503D87	R87	Coast Mountain; Orca Bay	**sub with 1-628B-S*** * must change chip on PCB to R59D
2	1-630BS	4-10-1503D75B	R75B	Alps	**Sub with PN# 1-628-MS2** Jet, Aux, Light, Heat-up, Heat-down, Inv

1

2

©2018

made in / fabriqué au Canada

TOPSIDE PANELS - CTI - MINI MAX DIGITAL

MINI MAX OVAL 3"x 6"

CTI/ELM **Mini Max PC Boards** - p. 6

ITEM	TOPSIDE PN#	PCB model	REV#	APPLICATION	NOTES
	Works only with PCB model...		Fonctionne seulement avec PCB modèle...		
1	1-628-MS	4-10-1503D96	R96	Generic	Jet1, Light, Blower, Jet2, Aux, Heat, Inv (above Light)
2	1-628H-APS	4-10-1503D76	R76	APC	no longer available
	1-628H-APSTD	4-10-1503D76	R76	APC	Jet, Aux1, Aux2, Light, Heat-up, Heat-down, Inv (above Aux1)
3	1-628J	4-10-1503D59D*	R59	Pacific	Jet, Aux, Light, Heat; **sub with 1-628B-S**
	1-628B-BS	4-10-1503D76	R76	Hydro Spa	**sub with 1-628H-APSTD**
	1-630A	4-10-1503D91	R91	Obara	Jet1, Jet2, Aux, Light, Heat-up, Heat-down, Inv (above Jet2)

1

3

2

* supersedes R59C and all previous revisions

MINI MAX OBLONG 2-1/8"x 5-3/4"

NO LONGER AVAILABLE

TOPSIDE PN#	PCB model	REV#	APPLICATION	NOTES **Sub ALL versions with PN# 1-628-MS2**
Works only with PCB model...		Fonctionne seulement avec PCB modèle...		
1-630U	4-10-1503D75B	R75B	Aruba; Hydro Spa	Jet, Program, Light, Heat-up, Heat-down, Inv
1-630V	4-10-1503D75B	R75B	Generic; external plug-in	Jet, Blower, Light, Heat-up, Heat-down, Inv
1-630VA	4-10-1503D75B	R75B	Generic	
1-630VAS	4-10-1503D75B	R75B	Generic	

Can't find what you're looking for? Contact us...we'll try our best to find it for you!

Vous ne trouvez pas ce dont vous cherchez?
Contactez nous... et nous ferons notre mieux de le trouver pour vous!

©2018

ELM Engineering Logistics Marketing®

TOPSIDE PANELS - CTI - DIGITAL SIGNETIC

TECH NOTE The Digital Signetic topside control panel with 8-wire cable is no longer available
Additional info bottom of p. 7
(4-wire cable versions are still commonly available)

DIGITAL SIGNETIC 2-1/8"x 5-1/4"

ITEM	TOPSIDE PN#	PCB model	REV#	APPLICATION	NOTES
	Works only with PCB model...		Fonctionne seulement avec PCB modèle...		
1	1-628L	4-10-1501A58	R58	Sunrise	4-button, 4-wire Jet, Light, Blower, Heat
2	1-628L1	4-10-1501A58	R58	Sunrise	3-button, 4-wire Jet, Light, Heat
3	1-629DS2	4-10-1501A58	R58	CTI Generic	**Replaces 1-628Q, 1-628QA, 1-628QB, 1-629DS** Jet1, Light, Blower, Jet2, Aux, Heat, Invert (above Light)

1

2

3

TECH NOTE 1-629FE = Jet1, Light, Inv, Jet2, not-used, Heat + a discreet Blower button above Light. When substituting 1-629FE with the 1-629DS, the INV and Blower button are reversed.

DIGITAL SIGNETIC 3"x 6"

TOPSIDE PN#	PCB model	REV#	APPLICATION	NOTES
Works only with PCB model...		Fonctionne seulement avec PCB modèle...		
1-629DS	4-10-1501A58	R58	CTI; Sunrise	Jet1, Light, Blower, Jet2, Aux, Heat, Inv (above Light)
1-629F-BLS	4-10-1501A88	R88	Coast Mountain	**no longer available**
1-629FE	4-10-1501A27B	R77*	Pacific Spas	**replace with 1-629DS or 1-629DS2** *R77 is updated R27
1-629-S	4-10-1501A89A	R89A	Obara	Jet1, Jet2, Aux, Light, Heat-up, Heat-down, Inv (above Jet2)
1-628P	4-10-1501A	— —	Premier	**replace with 1-629DS or 1-629DS2**

1-629DS

DIGITAL SIGNETIC 2-1/2"x 7-3/4"

NO LONGER AVAILABLE

ITEM	TOPSIDE PN#	PCB model	REV#	APPLICATION	NOTES
	Works only with PCB model...		Fonctionne seulement avec PCB modèle...		
1	1-628Q	4-10-1501A58	R58	Sunrise , 4-button	**Replace All Versions**
2	1-628QA	4-10-1501A58	R58	Sunrise , 5-button	**With PN# 1-629DS2**
3	1-628QB	4-10-1501A58	R58	Sunrise , 6-button	

1

2

3

©2018

PC BOARDS - CTI - MINI MAX & DIGITAL SIGNETIC

IMPORTANT **Please specify the software revision when ordering a PC Board. Contact us if you are unsure which revision you require.**

CTI/ELM **Mini Max Spa Paks** - p. 1

IMPORTANT **SVP specifier la revision de logiciel quand vous commandez un Tableau de Circuits. Contactez nous si vous n'êtes pas sure de quel révision vous avez besoin.**

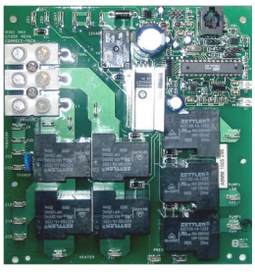

MODEL **Mini Max Digital 240V**

made in / fabriqué au Canada

Reverse compatible with all previous versions of the MINI MAX PCB

PCB PN#	REVISION	APPLICATION	TOPSIDE
4-10-1503D59D*	R59D*	CTI; Aqua Spa Pak; Strong; Pacific	1-628B-S
4-10-1503D75B	R75B	Aruba; Hydro Spa	1-630U
4-10-1503D76	R76	CTI; Hydro Spa	1-628H-APSTD
4-10-1503D80	R80	Ingenious IP-15; HydroWave; Nu-wave Tuff Spa; ASI (Action Spa); Scandia	1-628-MS2
4-10-1503D96	R96	Generic	1-628-MS
4-10-1503D87	R87	Orca Bay, Coast Mountain	1-628E
4-10-1503D91	R91	Obara	1-630A

* supersedes R59C and all previous revisions

MODEL **Mini Max Digital 120V**

PCB MODEL	REVISION	APPLICATION	TOPSIDE
4-10-1503C	R59C	Generic	1-628B-S3; 1-628B-S; 1-629M

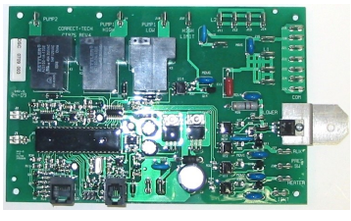

CONTACT ELM FOR AVAILABILITY
CONTACTEZ ELM POUR LA DISPONIBILITÉ

MODEL **Digital Signetic Hi CTI 975**

PCB PN#	REVISION	APPLICATION	TOPSIDE	NOTE
4-10-1501A58	R58	CTI; Sunrise; Sunclass	1-629DS	use R63 for circ pump applications
4-10-1501A88	R88	Coast Mountain	1-629F-BLS	replace with 1-629DS and PCB 4-10-1501A58
4-10-1501A27B	R77	Pacific Spas	1-629FE	R77 is updated R27
4-10-1501A26	R26	Nu-wave; Ingenious; Southwest; Scandia; Aries; ASI (Action Spa) - note: no topside available		
4-10-1501A89A	R89A	Obara	1-629-S	

Digital Signetic STI
(with 8-wire Topside Control Panel Cable)

STI PC boards must be replaced with PCB 4-10-1501A58 + new temp/hi-limit sensors + new topside panel 1-629DS or 1-629DS2

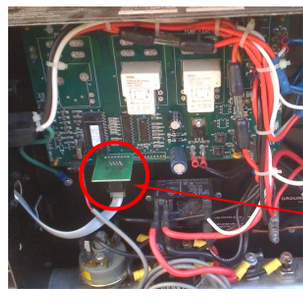

The Digital Signetic STI PC Board and the Topside Control Panel with 8-wire Cable are **NO LONGER AVAILABLE**

How to identify
Topside control (8-wire) phone style plug socket is horizontal and perpendicular to the main PC board

©2018
p: 905.670.5387 f: 905.670.5389 t: 888.502.6960 info@elmsalesandequipment.com

SENSORS - CTI - MINI MAX & DIGITAL SIGNETIC

SENSOR - TEMP & HIGH LIMIT - CTI

Item	Part No.	Description	Application
1	4-10-1919	STI - 4 pin	— —
2	4-10-1919B	3/8" - CTI	Temp or Hi-Limit
3	4-10-1919B-25	3/8" x 25 ft.	Temp only
4*	4-10-1919C	1/4" x 15 ft.	Temp only
5*	4-10-1919D	1/4" - CTI	Temp or Hi-Limit
6	4-10-1919D-PP	CTI Plug & Play	Temp or Hi-Limit
7*	4-10-1919E	CTI 18"	Hi-Limit only

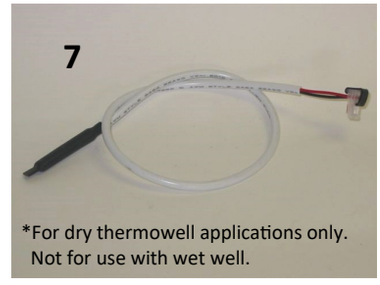

*For dry thermowell applications only. Not for use with wet well.

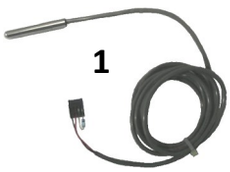

no longer available

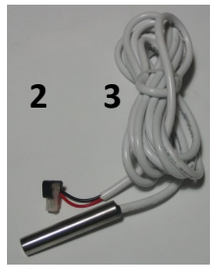

Stainless steel probe

*For dry thermowell applications only. Not for use with wet well.

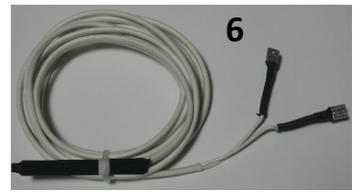

*For dry thermowell applications only. Not for use with wet well.

TOPSIDE PANEL CABLES - CTI

TOPSIDE PANEL CABLES - CTI

Part No.	Description
4-10-1508D	Cable - Control 8'
4-10-1508D-1	Cable - Control 15'
4-10-1508E	Cable - Control 25'
4-10-1508F	Cable - Control 50'
4-10-1508K	Cable - Control 75'
4-10-1508H	Cable - Control 100'

PC BOARD PARTS - CTI - MINI MAX

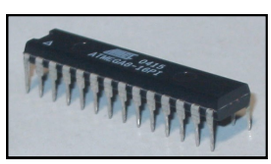

PN# **4-10-1509Y**
MODEL **Processor MMD ATMEGA8-16PC**

IMPORTANT You must choose a software revision for this product.
Vouz devez choisir la révision du logiciel pour ce produit.

PN# **4-10-1507**

PC Board Standoff Pin

©2018

Vous ne trouvez pas ce dont vous cherchez?
Contactez nous...et nous ferons notre mieux de le trouver pour vous!

TOPSIDE PANELS -TECMARK & LEN GORDON

TECMARK & LEN GORDON

Len Gordon **PC Boards** - p. 24

Item	Part No.	Description
		TECMARK - Panel Includes Overlay
1	1-TMCC4D-120-101-00	Command Center 120V 4-button w/DISPLAY*
	1-TMCC4-120-101-00	Command Center 120V 4-button - no display
—	1-TMCC2-120-101-00	Command Center 120V 2-button - no display
	1-628TML-2	Overlay for Command Center - 2 button
	1-628TML-3	Overlay for Command Center - 3 button
	1-628TML-4	Overlay for Command Center - 4 button
		LEN GORDON - Panel Includes Overlay
2	1-LG932449-120	Digital Topside 120V 4-button w/DISPLAY (same as 932446-120)
3	1-LG930746-516	Aqua-Set 120V 4-button w/DISPLAY (same as 930750-516)
—	1-LG930630-516	Aqua-Set 120V 2-button w/DISPLAY

* replaces 2-button & 3-button versions

TOPSIDE PANEL ADAPTERS

PANEL ADAPTERS

Part No.	Description
	UNIVERSAL
4-60-0010B	Black - 8'' x 3-1/4''x 1/16" PVC
	TECMARK
4-60-TM20205AA	Adapter plate - TecMark
	BALBOA
1-BAL10165	fits Deluxe, Standard & Duplex series
1-BAL11109	fits Lite Duplex series
1-BAL11718	fits Mini panel series
	GECKO
1-GEC9917-102053	Fits in.k200

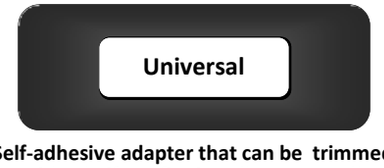

Self-adhesive adapter that can be trimmed with a knife to fit virtually any panel!

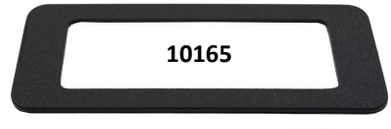

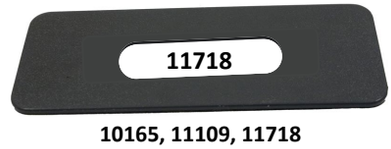

10165, 11109, 11718
OD: 8-9/16'' x 3-1/2''

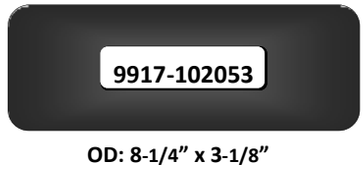

OD: 8-1/4" x 3-1/8"

©2018

ELM Engineering Logistics Marketing®

Balboa Topside Panel Overlays Available Separately - Please Contact ELM

BALBOA TOPSIDE CONTROL PANELS

TOPSIDE PANELS - BALBOA

Balboa Topside **Panel Adapters** - p. 8

MINI OVAL DUPLEX PANEL

Part No.	Model	Description
Base Panels		
1-BAL52267	VL200	Base Panel, No Overlay
1-BAL53999	VL260	Base Panel, No Overlay
Overlays		
1-BAL11095	VL200	Blower, Jets, Temp, Light
1-BAL11852	VL200	Jets, Light, Cool, Warm
1-BAL11219	VL200	— —, Jets, Temp, Light
1-BAL11393	VL200	Warm, Cool, Jets, Light
1-BAL11127	VL200	Jets, Jets, Temp, Light
1-BAL11521	VL260	Blower, Jets, Temp, Light
1-BAL11746	VL260	Jets, Light, Cool, Warm
1-BAL11724	VL260	— —, Jets, Temp, Light
1-BAL11725	VL260	Jets, Jets, Temp, Light

TECH NOTE **VL200 series Panels compatible with VS 'Duplex' systems ending in Z (ie. VS5xxZ)**

VL200 4-3/8" x 1-1/8"

VL260 7" x 2-3/16"

11095

11521

11852

11746

11219

11724

11393

11725

11127

CLAVIERS BALBOA

DUPLEX DIGITAL PANELS - VL402 / VL404 / VL406

7-5/16" x 3-1/4"

51225

51223

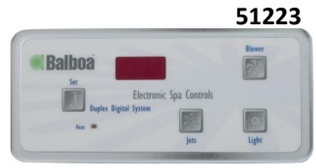

51248

54093

Part No.	Model	Description
1-BAL51225	VL404	LED, Temp, Jets, Light
1-BAL51223	VL404	LED, Temp, Jets, Light, Blower
1-BAL51248	VL404	LED, Temp, Jets1, Light, Jets2
1-BAL54093	VL402	LCD, Blower, Light, Jets, Temp
1-BAL55350	VL406U	LCD, Jets, Light, Warm, Cool
1-BAL50210	VL406T	LCD, Base Panel, No Overlay
1-BAL12051	— — —	Overlay for 50210 VL406T Jets1, Jets2, Light, Temp

50210

12051

Overlay, VL406T

7" x 3-7/16"

55350

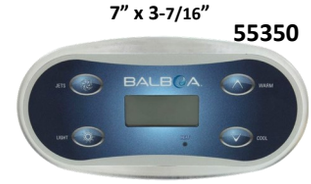

TECH NOTE **VL400 series Panels compatible with VS 'Duplex' systems ending in Z (ie. VS5xxZ). Also compatible with M-1, Value and 1000LE PC boards.**

©2018

TOPSIDE PANELS - BALBOA

LITE DUPLEX PANELS - VL400 / VL401 / VL403

6-5/16" x 2-1/4"

51676

54104

54094

55129

7-9/16" x 2-3/8"

Part No.	Model	Description
1-BAL51676	VL403	LED, Blower, Jets, Temp, Light
1-BAL54104	VL403	LED, Jets, Jets, Temp, Light
1-BAL54094	VL401	LCD, Blower, Jets, Temp, Light
1-BAL55129	VL400	LCD, Light, Temp, Jets, Aux

Phone style connector

Balboa Topside Panel **Extension Cables** - p.15

TECH NOTE **VL400 series Panels compatible with VS 'Duplex' systems ending in Z (ie. VS5xxZ). Also compatible with M-1 and Value PC boards.**

SERIAL STANDARD PANELS - VL701S & VL700S

Phone style connector

7" x 3-7/16"

54548

7-5/16" x 3-1/4"

53189

51057

51247

54547

9-7/8" x 3-1/8"

53811

Part No.	Model	Description
1-BAL53189	VL701S	Blower, Mode, Jets1, Jets2, Light, Warm, Cool
1-BAL51057	VL701S	Mode, Jets, Blower, Light, Warm, Cool
1-BAL51247	VL701S	Mode, Jets1, Jets2, Light, Warm, Cool
1-BAL53811	VL700S	Mode, Warm, Cool, Light, Blower, Jets1, Jets2
1-BAL54548	VL600S	Jets1, Jets2, Light, Warm, Mode, Cool
1-BAL54547	VL600S	Jets, Blower, Light, Warm, Mode, Cool

TECH NOTE **VL Panels ending in S compatible with VS 'Standard' systems ending in SZ (ie. VS5xxSZ). VL701S (only) also compatible with M-2/M-3 and 2000LE PC boards.**

DELUXE DIGITAL PANELS - VL801D

Phone style connector

Balboa Topside **Panel Backlight** - p.39

7-5/16" x 3-1/4"

54108

54128

51058

Part No.	Model	Description
1-BAL54108	VL801D	Time, Mode/Prog, Warm, Blower, Light, Cool, Jets1, Jets2
1-BAL54128	VL801D	Time, Mode/Prog, Warm, Blower, Light, Cool, Jets, Aux
1-BAL51058	VL801D	Prog, Mode, Warm, Time, Light, Cool, Jets, Blower

TECH NOTE
VL Panels ending in D compatible with VS 'Deluxe' systems ending in DZ (ie. VS5xxDZ). Also compatible with M-2/ M-3 PC boards.

©2018

Balboa Topside Panel Overlays Available Separately - Please Contact ELM

BALBOA TOPSIDE CONTROL PANELS

TOPSIDE PANELS - BALBOA

Balboa Topside **Panel Adapters** - p. 8

ML PANELS

TECH NOTE ML series topside panels are compatible with EL series control systems.

ML900 11-5/8" x 3-1/8"

OVERLAY CONFIG. Time, Warm, Mode/Prog, Cool, Jets1, Jets2, Jets3, Option, Invert, Fiber, Light, Blower

ML700 9-7/8" x 3-1/8"

OVERLAY CONFIG. Time, Warm, Mode/Prog, Cool, Light, Blower, Jets1, Jets2

ML551 7-3/8" x 3-1/4"

OVERLAY CONFIG. Light, Mode, Jets1, Jets2, Blower, Warm, Cool

Part No.	Model
1-BAL52654	ML900
1-BAL52649	ML700
1-BAL52684	ML400
1-BAL53502	ML551

ML400 7-9/16" x 2-3/8"

OVERLAY CONFIG. Jets, Aux, Temp, Light

Molex 8-pin connector

TP PANELS

TECH NOTE TP series topside panels are compatible with BP series control systems.

TP600 7-1/8" x 3-1/2"

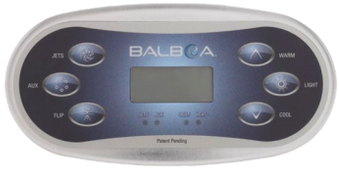

OVERLAY CONFIG. Jets, Aux, Flip, Warm, Light, Cool

Part No.
1-BAL55673

TP800 9-7/8" x 3-3/8"

Special Order

Molex 4-pin connector

TP400 8-3/8" x 2-7/16"

Special Order

CLAVIERS BALBOA

LITE DIGITAL PANELS

4-1/2" x 2-1/4"

LTD QTY ON HAND

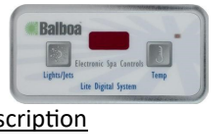

Phone style connector

Part No.	Base PN	Description
1-BAL51705	51705	Lite DIG, 6c, 7' cord
1-BAL54116	54116	Lite DIG, 6c, 10' cord
1-BAL51538*	51538	Lite DIG, 8c, 6' cord

* compatible only with specific OEM systems

TECH NOTE The LITE DIGITAL panel (except 51538) is compatible with the Lite Leader PC board.

AUXILIARY PANELS

4-1/2" x 2-1/4"

LTD QTY ON HAND

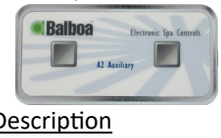

Phone style connector

Part No.	Base PN	Description
1-BAL51216	51216	6c, 18'cord, M-2/M-3
1-BAL51218	51218	6c, Duplex, 6' cord

Special Order AUX Panels

VX series for VS systems

AX series for EL systems

MISCELLANEOUS PANELS

Special Order

1-BAL51219

1-BAL51217

1-BAL51221

Phone style connector

1-BAL50798

1-BAL50799

1-BAL50796

Parallel-pin/ ribbon cable

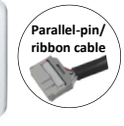

©2018

IMPORTANT: The "Chip # " (white label on the logic chip), PCB PN#, and spa pak PN# are required to properly match a Balboa PCB. Never try to match a PCB by appearance only. Programming varies by application.

Balboa **Transformers** - p. 37

PC BOARDS - BALBOA

DUPLEX SERIES (M-1)

54003

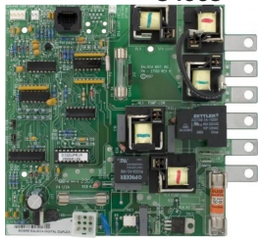

54091

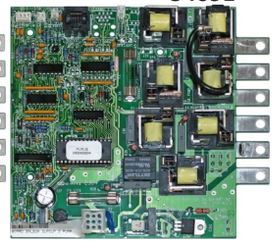

51491

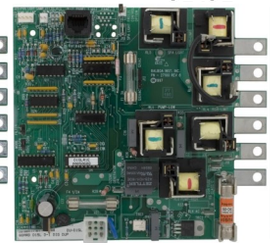

51230

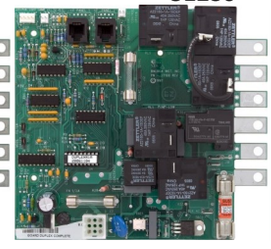

Ltd Qty Available 51429

ELM Part No.	Base PN	Description
1-BAL51230*	51230	Duplex Analog
1-BAL54003	54003	Duplex Digital, Super Duplex Digital (M-1)
1-BAL54091	54091	Super Duplex Digital (M-1)
1-BAL51429	51429	Jacuzzi Duplex Analog 2-pump (w/ph plug)
1-BAL50704*	50704	Duplex Analog (w/ph plug) early D1
1-BAL51491	51491	D1 Duplex Digital

* Special Order

Special Order 50704

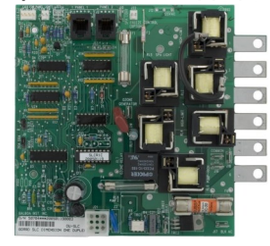

SERIAL STANDARD & DELUXE SERIES (M-2/M-3)

52518

54122

52076

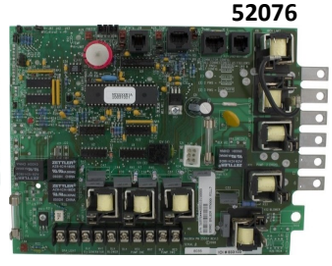

54175-02

Balboa **Sensors** - p. 15

50803

ELM Part No.	Base PN	Description	
1-BAL50803*	50803	Standard Analog	*limited qty available*
1-BAL54175	54175	Serial Standard Digital	*use 1-BAL52518*
1-BAL50804*	50804	Standard Digital	*limited qty available*
1-BAL52076	52076	Power System, STD or DLX	*special order*
1-BAL54122	54122	Serial Deluxe & Serial Standard	
1-BAL52518	52518	Retro Kit: Serial STD DIG & Serial DLX DIG (kit includes manuals/overlays)	

50804

*1-BAL50803 & 1-BAL50804 have been discontinued by Mfr - limited to quantity on hand.

©2018

IMPORTANT: Le "No de Puce" (étiquette blanche sur le logiciel), No de tableau, et No de boîtier sont requis afin de pouvoir identifier un tableau de Balboa. N'essayez jamais d'apparier un tableau seulement par l'aspect.

PC BOARDS - BALBOA

Balboa **Sensors** - p. 15

LE SERIES

52491

52295-01

52320

ELM Part No.	Base PN	Description
1-BAL52295	52295	2000LE, P-SW
1-BAL52320	52320	2000LE, M7
1-BAL52491	52491	1000LE Digital, P-SW

TECH NOTE
2000LE PC boards compatible with Serial Standard panels
1000LE PC boards compatible with Duplex Digital panels

VS SERIES

54369

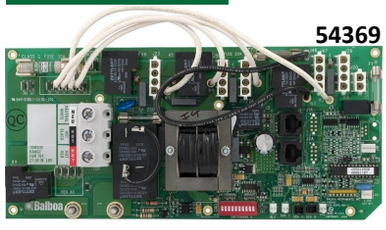

54357-02

54372-02

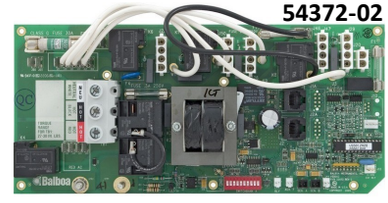

ELM Part No.	Base PN	Description
1-BAL54369	54369	VS500Z
1-BAL54357	54357	VS501Z
1-BAL54378	54378	VS501SZ
1-BAL54372	54372	VS510SZ
1-BAL54385	54385	VS511SZ
1-BAL56297	56297	VS100 (120V)
1-BAL56299	56299	VS100 (240V)

TECH NOTE
VS series PC boards suffix:
Z = compatible with Duplex/Lite Duplex panels
SZ = compatible with Serial Standard panels
DZ = compatible with Deluxe Digital panels

Special Order - we can get it fast!

VALUE SERIES

54161

52213

ELM Part No.	Base PN	Description
1-BAL54161	54161	2000 Value, P-SW (no M7)
1-BAL52213	52213	Jacuzzi Value, P-SW

LITE SERIES

54115

51056

ELM Part No.	Base PN	Description
1-BAL51056	51056	Lite Digital
1-BAL54115	54115	Lite Leader

©2018

IMPORTANT: The "Chip # " (white label on the logic chip), PCB PN#, and spa pak PN# are required to properly match a Balboa PCB. Never try to match a PCB by appearance only. Programming varies by application.

Balboa **Transformers** - p. 37

PC BOARDS - BALBOA

EL SERIES

53414

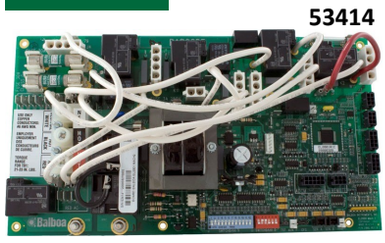

53974-03

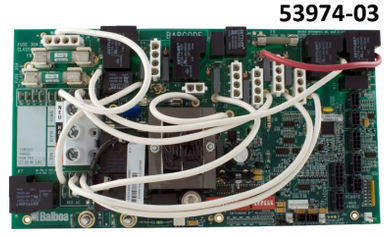

54387

ELM Part No.	Base PN	Description
1-BAL53414	53414	EL2001 Mach2.1, M7
1-BAL54387	54387	EL1000, M7 *special order*
1-BAL53974	53974	EL2001 Mach3.0, M7
1-BAL53858	53858	EL8000 Mach3.0, M7 *special order*

TECH NOTE
PN# 53414 and PN# 53974 are NOT interchangeable - the mounting holes are in different locations.

SUV SERIES

52532-02

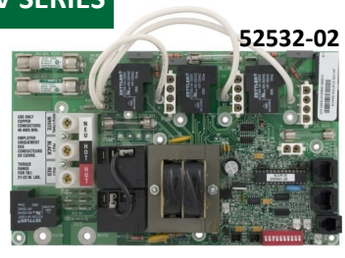

ELM Part No.	Base PN	Description
1-BAL52532	52532	SUV Digital,M7

HEAT JACKET SYSTEM

53247

ELM Part No.	Base PN	Description
1-BAL53247	53247	Heat jacket systems only

PC EXPANDER BOARDS

Mini PC Board mounted horizontally on the heater manifold, inside the spa pak, below the main PC board

53681

53544

ELM Part No.	Base PN	Description
1-BAL53544	53544	Expander Board, VS series, used for 1-spd pump output (P2)
1-BAL53681	53681	Expander Board, VS/EL series, w/30A fuse, for 1-spd pump output

TECH NOTE 1-BAL53681 can also replace 1-BAL53544 for applications where branch circuit protection is required for high amp pumps that would overload the F5 power input fuse on the main PCB.

©2018

SENSORS - BALBOA

SENSOR - TEMP & HIGH LIMIT - BALBOA

Part No.	Description
1-BAL30278	96" temp(1/4"), 31" hi-limit(1/4"), 4-pin con
1-BAL30337	96" temp(3/8"), 31" hi-limit(1/4"), 4-pin con
1-BAL30337-25	25' temp(3/8"), 31" hi-limit(1/4"), 4-pin con
1-BAL30298	31" hi-limit(1/4"), 2-pin con, ALL non-M7 (except LE)
1-BAL30294	96" temp(3/8"), 2-pin con
1-BAL30327 [1]	25' temp(3/8"), 2-pin con
1-BAL30326	50' temp(3/8"), 2-pin con
1-BAL30352	96" temp(3/8"), 2-pin con, non-M7 Value/LE only
1-BAL32016 [2]	24" temp/hi-limit(1/4"), 2-pin con, M7 Value/LE/SUV
1-BAL30514	31" temp/hi-limit(1/4"), 2-pin con, M7 Value/LE/SUV
1-BAL53605 [3]	12" temp/hi-limit(1/4"), 2-pin con, M7 Value/LE/SUV
1-BAL50111	72" temp(3/8"), 2-pin con, Sundance 500 & 600 series
1-BAL52560	Sensor Mount, M7/non-M7 Value/LE/SUV
1-BAL30674	12" temp, adhesive Foam Surface Mount, 2-pin con, M7

30674

30337

30337-25

50111

30298

53605
32016

30294

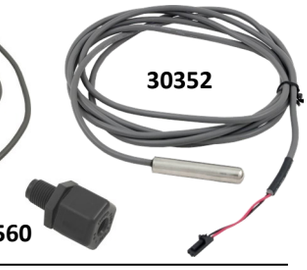
30352
52560

[1]same as 30606 [2]same as 30382 [3]same as 30344

TOPSIDE PANEL EXTENSION CABLES - BALBOA

CONTROL PANEL CABLES - BALBOA

Part No.	Description
1-BAL22630	100 ft. Extension, 8-Con, Serial STD/DLX, w/adapters
1-BAL22632	50 ft. Extension, 8-Con, Serial STD/DLX, w/adapters
1-BAL22635	25 ft. Extension, 8-Con, Serial STD/DLX, w/2 to 1 adapter
1-BAL22636	25 ft. Extension, 6-Con, Duplex, w/1 to 1 adapter
1-BAL30395	3 ft. Extension, 8-Con, Serial STD/DLX, w/1 to 1 adapter
1-BAL30311	10 ft. Extension, 8-Con, Serial STD/DLX, w/1 to 1 adapter
1-BAL11588-2	50 ft. Extension, 8-Con, Molex connector
1-BAL11589-2	50 ft. Extension, 6-Con, Molex connector

11588-2

11589-2

22630

22632

22635

22636

30395

30311

©2018

Vous ne trouvez pas ce dont vous cherchez?
Contactez nous...et nous ferons notre mieux de le trouver pour vous!

TECH NOTE all Balboa spa pak kits this page will support a circ pump.

SPA PAK KITS - BALBOA

BALBOA SPA PAK KITS INCLUDE: SPA PAK, TOPSIDE PANEL & ADAPTER PLATE, AMP STYLE CORDS

PN# **1-BAL54219Z**

MODEL VS500Z

FEATURES P1-120/240V 2spd, Ozonator 120/240V, Light 12V, 5.5KW heater

TOPSIDE PANEL **MINI-OVAL** PN# **1-BAL52144** **incl.**

PN# **1-BAL54216Z** ***SPECIAL ORDER***

MODEL VS500Z

FEATURES P1-120/240V 2spd, Ozonator 120/240V, Light 12V, 5.5KW heater

TOPSIDE PANEL **LITE DUPLEX** PN# **1-BAL51676**

PN# **1-BAL54220Z**

MODEL VS501Z

FEATURES P1-120/240V 2spd, Blower 120/240V, Ozonator 120/240V, Light 12V, 5.5KW heater

TOPSIDE PANEL **MINI-OVAL** PN# **1-BAL52144** **incl.**

PN# **1-BAL54217Z** ***SPECIAL ORDER***

MODEL VS501Z

FEATURES P1-120/240V 2spd, Blower 120/240V, Ozonator 120/240V, Light 12V, 5.5KW heater

TOPSIDE PANEL **LITE DUPLEX** PN# **1-BAL51676**

PN# **1-BAL54218Z**

MODEL VS510SZ

FEATURES P1-120/240V 2spd, P2-120/240V 1spd, Blower 120/240V, Ozonator 120/240V, Light 12V, 5.5KW heater

TOPSIDE PANEL **SERIAL STANDARD** PN# **1-BAL53189** **incl.**

HEAT JACKET SYSTEM - BALBOA

PN# **1-BAL52973**

MODEL Heat Jacket System (for systems that recover heat from the pump)

FEATURES P1-120 1spd only, Light 12V ****includes cord w/ 15A 120V GFCI!****

*** Topside Panel Sold Separately**

©2018

Gecko Topside Panel Overlays Available Separately - Please Contact ELM

GECKO TOPSIDE CONTROL PANELS

TOPSIDE PANELS - GECKO

Gecko Topside **Panel Adapters** - p. 8

4-1/2" x 2"

PN# **1-GEC0202-007154**

MODEL **TSC-9 / K-9** SAME AS 3-00-7251, BDLTSC9PPD

FEATURES 4 button, LED Display, includes 1-pump & 2-pump overlay

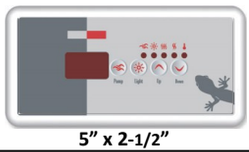

5" x 2-1/2"

PN# **1-GEC0202-007049**

MODEL **TSC-18 / K-18** SAME AS 3-00-7218, BDLTSC18GE1

FEATURES 4 button, LED Display, includes 1-pump overlay

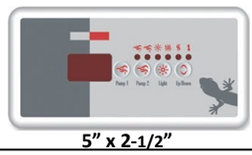

5" x 2-1/2"

PN# **1-GEC0202-007049A** *Limited to Quantity on Hand*

MODEL **TSC-18 / K-18** SAME AS 0202-007134, BDLTSC18GE3

FEATURES 4 button, LED Display, includes 1-pump + blower overlay

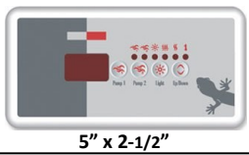

5" x 2-1/2"

PN# **1-GEC0202-007049B**

MODEL **TSC-18 / K-18** SAME AS BDLTSC18GE2, BDLTSC18PPD

FEATURES 4 button, LED Display, includes 2-pump overlay

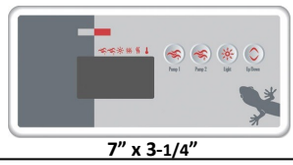

7" x 3-1/4"

PN# **1-GEC0202-007140**

MODEL **TSC-19 / K-19** SAME AS 3-00-7219, BDLTSC19PPD (Replaces Coast TSC-34)

FEATURES 4 button, LED Display, includes 1-pump or 2-pump overlay

CLAVIERS GECKO

0200-007113 7" x 3-1/4"

0200-007113A

PN# **1-GEC0200-007113** S/A BDLTSC8GE2

PN# **1-GEC0200-007113A** S/A BDLTSC8GE1

(Replaces: Arctic TSC-14, Sunrise TSC-56, Dynasty TSC-52)

MODEL **TSC-8 / K-8**

FEATURES LCD Display, incl. 2-pump + blower o/lay

7" x 3-1/4"

PN# **1-GEC0202-007143**

MODEL **TSC-35 / K-35** SAME AS BDLTSC35GE1

FEATURES 6 button, LED Display, for S-/M-CLASS, incl. 2-pump + blower o/lay

7" x 3-1/4"

PN# **1-GEC0201-007148**

MODEL **TSC-4 / K-4** SAME AS BDLTSC4GE1 (Replaces Coast TSC-21)

FEATURES 8 button, LED Display, for M-CLASS/TSPA, incl. 2-pump + blower o/lay

7" x 3-1/4"

PN# **1-GEC0201-007044**

MODEL **TSC-4-10K / K-4** SAME AS BDLTSC410K (Replaces Coast TSC-46)

FEATURES 10 button, LED Display, for M-CLASS, incl. 3-pump + blower o/lay

©2018

TOPSIDE PANELS - GECKO - Aeware Series

4-3/4" x 2"

PN# **1-GEC0607-008004**

MODEL **in.k200** SAME AS BDLK2001OP

FEATURES 4 button, LED Display, for in.xe systems , 1-output, incl. overlay

4-3/4" x 2"

PN# **1-GEC0607-008001**

MODEL **in.k200** SAME AS BDLK2002OP, 3-00-4242

FEATURES 4 button, LED Display, for in.xe systems , 2-output, incl. overlay

7-1/8" x 2-7/8"

PN# **1-GEC0607-005008**

MODEL **in.k450** SAME AS BDLK4503OP

FEATURES LCD Display, for in.xe and in.xm 3-output systems, incl. overlay

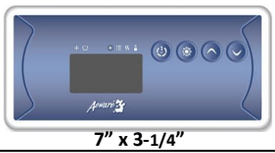

7" x 3-1/4"

PN# **1-GEC0607-007026**

MODEL **in.k19** SAME AS BDLK191OP

FEATURES 4 button, for in.xe systems , 1-output, includes overlay

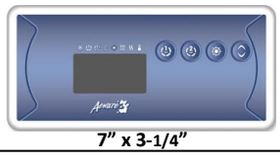

7" x 3-1/4"

PN# **1-GEC0607-007027**

MODEL **in.k19** SAME AS BDLK192OP

FEATURES 4 button, for in.xe systems , 2-output, includes overlay

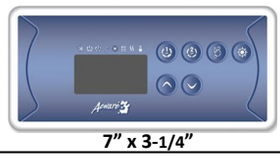

7" x 3-1/4"

PN# **1-GEC0607-007028**

MODEL **in.k35** SAME AS BDLK353OP

FEATURES 6 button, for in.xe systems , 3-output, includes overlay

8-3/4" x 4-1/4"

PN# **1-GEC0607-009014**

MODEL **in.k600** (static interface) SAME AS BDLK6005OP

FEATURES LCD Graphic Display, for in.xe and in.xm 5-output systems, includes overlay

8-3/4" x 4-1/4"

PN# **1-GEC0607-007014**

MODEL **in.k600** (menu-driven interface) SAME AS BDLK600GF

FEATURES LCD Graphic Display, for in.xm systems only, includes overlay

Contact ELM for pricing and availability of the latest Gecko Keypads

©2018

ELM Engineering Logistics Marketing®

Vous ne trouvez pas ce dont vous cherchez?
Contactez nous...et nous ferons notre mieux de le trouver pour vous!

GECKO SPA PAKS

BOÎTIERS GECKO

SPA PAKS - GECKO

Gecko **Topside Panels** - p. 17-18

PN# **1-GEC0202-205212**

MODEL **SC-CF-P12-O-CP-LH-H4.0-U-GE1**

TECH NOTE This spa pak does not come with receptacles

FEATURES P1-240V 2spd, circ pump 120V, Ozonator 120V, Light 12V, 4.0KW heater

COMPATIBLE WITH TOPSIDE PANEL **TSC-9, TSC-18, TSC-19**

PN# **1-GEC3-72-7079**

MODEL **SSPA-1-P122-P212-O1-NE-LS-H4.0-JJM-PPD**

FEATURES P1-240V 2spd, P2-240V 1spd, Ozonator 120V, Light 12V, 4.0KW heater, J&J Mini Receptacles

COMPATIBLE WITH TOPSIDE PANEL **TSC-9, TSC-18, TSC-19**

PN# **1-GEC3-72-7078**

MODEL **SSPA-1-P122-P212-O1-NE-LS-H4.0-AMP-PPD**

FEATURES P1-240V 2spd, P2-240V 1spd, Ozonator 120V, Light 12V, 4.0KW heater, AMP Receptacles

COMPATIBLE WITH TOPSIDE PANEL **TSC-9, TSC-18, TSC-19**

PN# **1-GEC0202-205160**

MODEL **SC-MP-P122-P212-B1-CP1-01-AO11-H4.0-JJM-SBD**

FEATURES P1-240V 2spd, P2-240V 1spd, Blower 120V, Ozonator 120V, Circ pump 120V, Light 12V, 4.0KW heater, J&J Mini Receptacles

COMPATIBLE WITH TOPSIDE PANEL **TSC-8, TSC-52**

PN# **1-GEC0202-205162**

MODEL **SC-MP-P122-P212-B1-CP1-01-A011-H4.0-JJC-NE-SBD**

FEATURES P1-240V 2spd, P2-240V 1spd, Blower 120V, Ozonator 120V, Circ pump 120V, Light 12V, 4.0KW heater, J&J Mini Receptacles

COMPATIBLE WITH TOPSIDE PANEL **TSC-9, TSC-18, TSC-19, TSC-35**

PN# **1-GEC0202-205163**

MODEL **SC-MP-P122-P212-B1-CP1-01-AO11-H4.0-AMP-SBD**

FEATURES P1-240V 2spd, P2-240V 1spd, Blower 120V, Ozonator 120V, Circ pump 120V, Light 12V, 4.0KW heater, AMP Receptacles

COMPATIBLE WITH TOPSIDE PANEL **TSC-8, TSC-52**

PN# **1-GEC0602-221063-299 (supersedes 0602-221022**)

MODEL **IN.XE-5-11-H4.0-1-2-K-K-D-60K-V2-GD1**

FEATURES P1-1 or 2spd, P2-1spd, Blower (*or* Circ pump), Ozonator, Light, 4.0KW heater

COMPATIBLE WITH TOPSIDE PANEL **in.k200, k19.in, k35.in, in.k450, in.k600 static**

PN# **1-GEC0602-221066-300 (supersedes 0602-221046)**

MODEL **IN.XE-5-12-H4.0-1-2-K-K-D-60K-V2-GD1**

FEATURES P1-1 or 2spd, P2-1 or 2spd, Blower (*or* Circ pump), Ozonator, Light, 4.0KW heater

COMPATIBLE WITH TOPSIDE PANEL **in.k200, k19.in, k35.in, in.k450, in.k600 static**

in.XE **cables & cable kits** - p.21 & 42

©2018

...continued... SPA PAKS - GECKO

PN# **1-GEC0601-221104**

MODEL **IN.XM2-8-1-2-K-K-B-K-O-K-R-GE1**

FEATURES P1-1 or 2spd, P2-1 or 2spd, P3-1spd, Blower, Ozonator, Circ pump, Light

COMPATIBLE WITH TOPSIDE PANEL **in.k450, in.k600 menu-driven or static interface**

remote in.therm heater for in.XM spa pak - p.46

TECH NOTE on Gecko IN.XE and IN.XM systems, the component output voltage is determined by the in.link cable rating. In.link cables are available for 120V or 240V output applications.

in.XM **cables & cable kits** - p.21

PN# **1-GEC3-74-7036**

MODEL **MC-MP-P122-P222-P312-B1-O1-CP1-NE-A11-A21-LS-H5.5-RTC-T2-JJC-SBD**

FEATURES P1-240V 2spd, P2-240V 2spd, P3-240V 1spd, Blower 120V, Ozonator 120V, Circ pump 120V, Light 12V, 5.5KW heater, J&J Mini Receptacles

COMPATIBLE WITH TOPSIDE PANEL **TSC-8, TSC-4**

SPA PAK KITS - GECKO

PN# **1-GECBDLYE5K200**

SPA PAK KIT
- **in.ye-5 pak**
- **in.k200-2OP keypad**
- **Adapter plate**
- **(1x) 2-spd Amp cable**
- **(2x) 1-spd Amp cables**
- **Light cable**

PN# **1-GECBDLYE5K450**

SPA PAK KIT
- **in.ye-5 pak**
- **in.k450-3OP keypad**
- **Adapter plate**
- **(2x) 2-spd Amp cables**
- **(2x) 1-spd Amp cables**
- **Light cable**

TECH NOTE 5 configurable relay outputs, 120V or 230V; 2-spd pump uses 2 relay outputs; 20 GPM minimum flow required

Gecko **Transformers** - p. 37

PC BOARDS - GECKO

M-CLASS SERIES

0201-300045

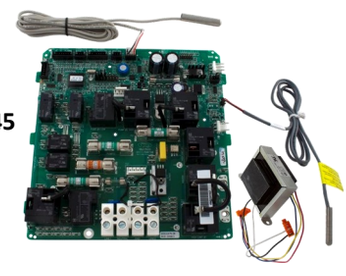

0201-300014

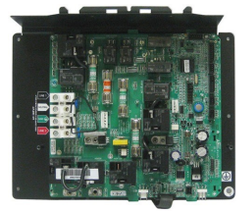

0201-300031

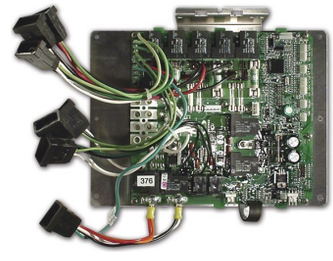

ELM Part No.	MFR No.	Description
1-GEC0201-300045	0201-300045	Kit - most MSPA-1 & MSPA-4; includes transformer & probes
1-GEC0201-300031	0201-300031	Kit - all MSPA-MP-BFs; incl. JJ receptacles; works w/Arctic TSC-14
1-GEC0201-300014	0201-300014	Kit - all MSPA-MP Propak; works with TSC-4, TSC-8 or TSC-47

TECH NOTE To accurately match a Gecko replacement PC board or spa pak, you will require the **ID#, Model# and Options Code**.

©2018

SENSORS - GECKO

Gecko **Transformers** - p. 37

SENSOR - TEMP & HIGH LIMIT - GECKO

Part No.	Description
1-GEC9920-100317	S-Class ribbon-style hi-limit
1-GEC9920-100318	M-Class ribbon-style hi-limit
1-GEC9920-400122	Hi-limit 14" MSPA-1/MSPA-4/TSPA
1-GEC9920-400684	Hi-limit 76" MSPA-1/MSPA-4/TSPA
1-GEC9920-400446 [1]	Hi-limit 48" SSPA/MSPA-MP
1-GEC9920-400125 [2]	Temperature 10' MSPA-1/MSPA-4/TSPA
1-GEC9920-400245	Temperature 25' MSPA-1/MSPA-4/TSPA
1-GEC9920-400262 [3]	Temperature 10' SSPA/MSPA-MP
1-GEC9920-400720	Temperature 25' SSPA/MSPA-MP

[1] Replaces 9920-400490, -400435, -400516, -400523, -400685, -400336, -100150
[2] Replaces 9920-400747
[3] Replaces 9920-400346, -400723, -400342 and all earlier 3-wire versions

9920-100317

9920-100318

9920-400125

9920-400446

CORDS & PARTS - GECKO

Gecko **Fuses** - p. 43

PARTS - GECKO

Part No.	Description
1-GEC9920-400436	Topside Panel Extension cable - 15ft.
1-GEC9920-401160	Heater wire, S-Class, 1.5"
1-GEC9920-401161	Heater wire, M-Class, 3.0"
4-10-0100	5-Pos. ground bus bar, S-Class

9920-401161

9920-401160

4-10-0100

9920-400436

CORDS - GECKO - in.XE / in.XM (IN.LINK)

Part No.	Description
	KITS
4-10-GEC9920-101436	240V; 2 HC, 2 LC, Light
4-10-GEC9920-101439	120V; 2 HC, 1 LC, Light
1-GEC9920-101477	Adapter KIT, AMP-M to JJM-F
	INDIVIDUAL CORDS
1-GEC600DB0721	240V, LC, 48", BL/OZ/CP
1-GEC600DB1226	120V, LC, 96", BL/OZ/CP
1-GEC600DB0833	240V, HC, 96", BL/1-spd pump
1-GEC600DB0857	120V, HC, 96", BL/1-spd pump
1-GEC600DB0692	240V, HC, 48", 2-spd pump
1-GEC600DB0821	240V, HC, 96", 2-spd pump
1-GEC9920-401239	120V, HC, 96", 2-spd pump
1-GEC9920-401022	12V, 2A, 144", Light cord

9920-101436

9920-101439

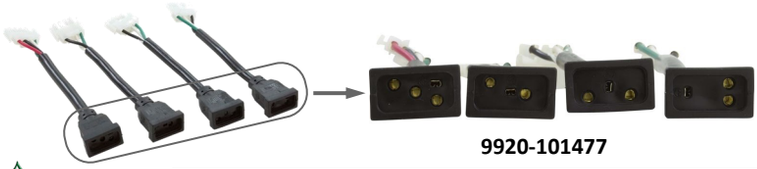
9920-101477

©2018

extremely versatile, user friendly, easy to install, field replacement spa paks…
the techs love these, and so do their customers!

SPA PAK KITS - UNITED SPA CONTROLS

tried and true in the USA since 1996!

The C5 Electronic Control series. Off-the-shelf applications for...

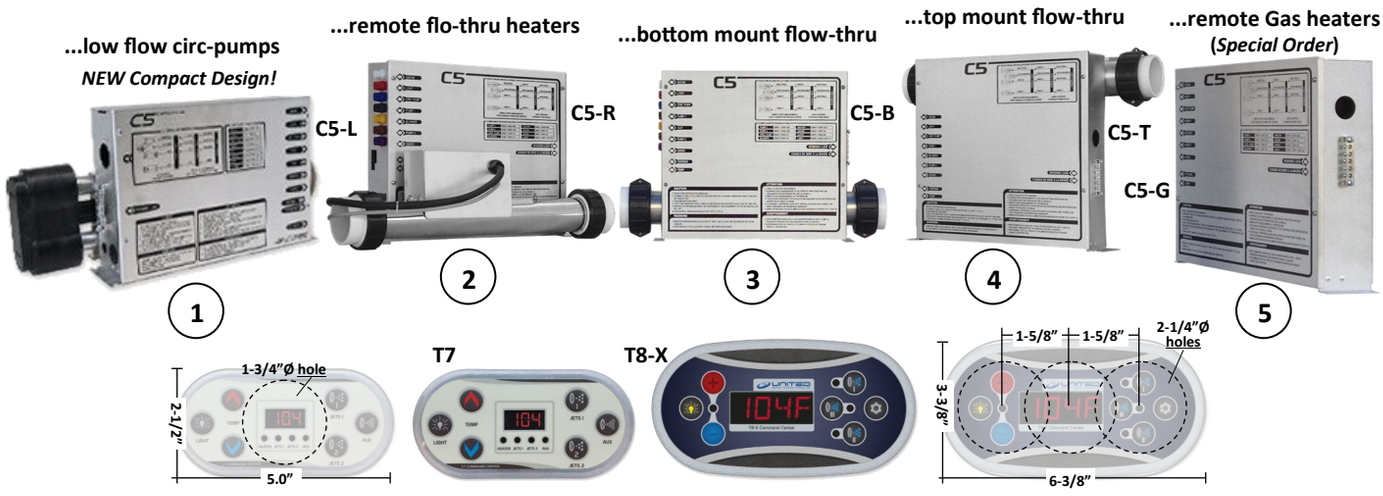

Spa Pak Kits include: Spa Pak, Topside Panel, P1 2-spd cable, 12V Light Harness

SPA PAK KITS - UNITED SPA CONTROLS

	Part No.	Description
1	1-USC-CLT7	C5-L Spa Pak w/ T7 Topside Panel
	1-USC-CL8X	C5-L Spa Pak w/ T8-X Topside Panel
2	1-USC-CRT7	C5-R spa pak w/ T7 Topside Panel
	1-USC-CR8X	C5-R spa pak w/ T8-X Topside Panel
3	1-USC-CBT7	C5-B spa pak w/ T7 Topside Panel
	1-USC-CB8X	C5-B spa pak w/ T8-X Topside Panel
4	1-USC-CTT7	C5-T spa pak w/ T7 Topside Panel
	1-USC-CT8X	C5-T spa pak w/ T8-X Topside Panel
5	1-USC-CGT7	C5-G spa pak w/ T7 Topside Panel
	1-USC-CG8X	C5-G spa pak w/ T8-X Topside Panel

ALL C5 Series Spa Paks Support:
230V / 120V convertible power in
230V or 120V for each component output
2.0A Circ-pump
12.0A P1 2-spd
12.0A P2 2-spd (1-spd if using Aux)
12.0A Aux (P3 1-spd *or* blower)
1.0A Ozonator
4.0A AV (constant voltage)
0.9A 12V light
4.0kW heater - C5-L
5.0kW heater - C5-B, C5-T, C5-R, C5-G

COMPONENTS - UNITED SPA CONTROLS

Part No.	Description
1-USC-FP129	T7 Adapter plate
1-USC-FP118	T8-X Adapter plate
1-USC-EL117	T7 Topside Panel
1-USC-EL109	T8-S Topside Panel
1-USC-EL110	T8-X Topside Panel
1-USC-EL148	B8 PC Board
1-USC-EL114	Topside Panel Cable, 10-pin Molex, 8ft.
1-USC-EL136	Topside Panel Cable, 10-pin Molex, 30ft.
1-USC-TR108	Transformer, 120/240VAC to 12VAC, 2A
1-USC-EL123	Sensor, Temp or Hi-Limit, C5 Controls
1-USC-EL115	T8-X Topside Overlay Assy w/domes
1-USC-EL116	T7 Topside Overlay Assy w/domes

Spa Pak Dimensions in inches
(without tail pieces)

	H	W	D
C5-B	11.25	15.50	3.25
C5-T	13.00	15.50	6.00
C5-L	8.50	20.75	6.00
C5-G	11.25	12.75	3.00
C5-R	11.25	12.75	3.00
C5-R heater	6.00	15.50	3.25

©2018

Can't find what you're looking for? Contact us...we'll try our best to find it for you!

WATKINS

Need other Watkins Topside Panels, PC boards, Sensors and parts? Call ELM!
Avez-vous besoin d'autres Claviers, Tableaux, Sondes et Pièces de Watkins? Appelez ELM!

Part No.	Description
1-WAT38415	Sensor Temp, female pins, 1995-2002 IQ2000 spa pak
1-WAT38416	Sensor Hi-Limit, male pins, 1995-2002 IQ2000 spa pak
1-WAT39525	Sensor Hi-Limit ICS, 2002+ IQ2020 spa pak
1-WAT39530	Sensor Temp ICS, 2002+, IQ2020 spa pak
1-WAT74618	PC Board, Heater Relay, Watkins; OE# 77119

38415

38416

39525

39530

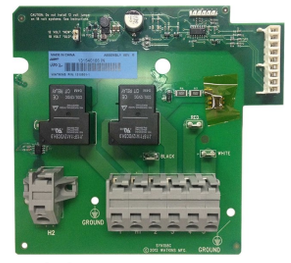
74618

Watkins **HEATERS** - p. 49, 51

SUNDANCE

Need other Sundance Topside Panels, PC boards, Sensors and parts? Call ELM!
Avez-vous besoin d'autres Claviers, Tableaux, Sondes et Pièces de Sundance? Appelez ELM!

Part No.	Description
1-SD6600-068	Hi-Limit Sensor, 'curled finger' connectors, 60"
1-SD6600-166	Temp Sensor, 'curled finger' connectors, 144"
1-SD6600-110	Hi-Limit Sensor, 'box-end' connectors, 84"
1-SD6600-105	Temp Sensor, 'box-end' connectors, 144"
1-SD6600-633	Topside Control, 780 Panel 2005+; replaces SD6600-631 Panel, Sweetwater 2003-4 *SPECIAL ORDER*
1-SD6600-832	Topside Control, Sweetwater/LX-15, LED display, 2-pump; replaces SD6600-834

6600-832

6600-633

6600-068

6600-166

curled finger

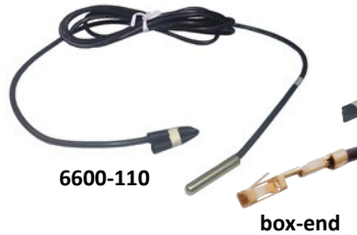
6600-110

box-end

6600-105

Sundance **HEATERS** - p. 49, 50, 53

WATKINS / SUNDANCE / HYDROQUIP

HYDROQUIP

Need other HydroQuip Topside Panels, PC boards, Sensors and parts? Call ELM!
Avez-vous besoin d'autres Claviers, Tableaux, Sondes et Pièces de HydroQuip? Appelez ELM!

Part No.	Description
1-HQ33-0024B-R4	PCB - ECO-3, Dig. 120V, fits HQ CS & ES 6200 & 9200 series systems
1-HQ34-0197	TSC - ECO-3, for HQ 6230 & 9230 series spa paks

33-0024B-R4

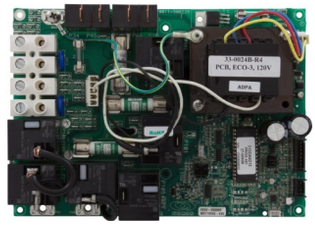

34-0197

©2018

Vous ne trouvez pas ce dont vous cherchez?
Contactez nous...et nous ferons notre mieux de le trouver pour vous!

SPA BUILDERS

SPA BUILDERS

Spa Builders **HEATERS** - p.49

Part No.	Description
1-SBS3-00-0139	Topside Panel LX-10/LX-05 4-b Alpha R5.31, w/overlay
1-SBS3-00-0140	Topside Panel LX-15 6-b Alpha R5.31, w/overlay
1-SBS3-60-0123	PC Board LX-15 Alpha R1.31 (pre 2000) - Special Order
1-SBS3-60-0119	PC Board LX-15 Alpha R5.31 (post 2000)
1-SBS3-60-1087	EPROM Chip LX-10/LX-15 Alpha R5.31
1-SBS5-60-1122	Dual Sensor LX-10 / LX-15 90” temp/14” hi-limit
1-SBS5-30-0052	Transformer LX-10/LX-15, 220V w/plug

3-60-0119

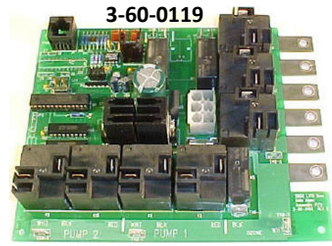

3-00-0139

3-00-0140

3-60-1087

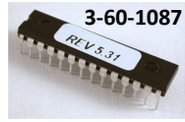

5-30-0052

5-60-1122

TECH NOTE For pre 2000 LX-10 and LX-15 systems: when replacing the topside control panel you must also change the EPROM Chip on the original PCB to 1-SBS-3-60-1087

BRETT AQUALINE

BRETT AQUALINE

Brett Aqualine **HEATERS** - call

Part No.	Description
1-BA3-00-5011	BL-70 Topside Panel 8-b
1-BA38-0400A	Temp Sensor J2 Digital, 60”, for BL-45/-46/-50/-60/-70/-80
1-BA38-0399	Hi-limit sensor, 15”

3-00-5011

38-0400A

38-0399

LEN GORDON

LEN GORDON

Part No.	Description
1-LG725835-0	PC Board, 30 min time-out for AS-5TD-30MM time delay control

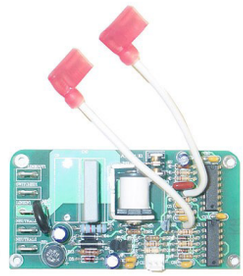

725835-0

Len Gordon **#10 Air Button** - p. 118

Len Gordon **Topside Controls** - p. 8

©2018

SPA BUILDERS / BRETT AQUALINE / LEN GORDON

SPA PAKS - Error Codes

This information is NOT intended in any way as a service guide or a means for unqualified persons to service spa equipment - the following is provided for reference only. All service must be performed by a licensed spa technician or a qualified electrician. Failure to properly service or install spa related components can result in serious injury or death. DO NOT remove the protective covers from any electrical enclosure or attempt to service any related electrical device unless you are qualified.

Possible Causes for the Most Common Error Codes

Pressure/Flow Switch open	low water level, dirty filter cartridge, pump failure, plumbing blockage, pressure-switch failure, pump relay failure (stuck open), pump air lock, closed valve, improper pressure-switch adjustment
Pressure/Flow Switch closed	static water pressure, improper pressure-switch adjustment, pump relay failure (stuck closed), pressure-switch failure
Temp Sensor fault	low water flow, sensor fault, sensor unplugged, oxidized connection, PCB fault
Hi-Limit Sensor fault	low water level, dirty filter cartridge, pump failure, plumbing blockage, pump relay failure (stuck closed), sensor fault, PC Board fault
Water Temp Overheat	high ambient temperature, thermal gain caused by pump running too long, pump relay failure (stuck closed), pump out of phase (running at hi-speed instead of low-speed during filter cycles)

BALBOA pre-M7 Series (older spa paks)

OH / HL (solid)	overheat - sensor has detected 118°F at heater
OH / HL (flashing)	overheat - sensor has detected 110°F spa water
FLO / FL (flashing)	pressure switch open, pump on
FLC / FL (solid)	pressure switch closed, pump off
Cool	water temp 20°F below set point
ICE / IC	potential freeze condition has been detected
Sn1 / Sn	hi-limit sensor fault
Sn3 / Sn	temp sensor fault
ILOC	interlock fault
Pd	no power to spa pak, on battery backup
SbY / StbY	spa is in standby mode

Although we have done our best to ensure the accuracy of this information, OEM spa pak error codes are subject to change without notice. We make no representation as to the accuracy or completeness of this data and are not responsible for errors or omissions. Always refer to your owner's manual.

©2018

BOÎTIERS - Codes d'Erreurs

Cette information n'est PAS conçue comme un guide de service ou un moyen pour des personnes non qualifié d'entretenir l'équipement du spa - le suivant est fourni en source informatique seulement. Tout le service doit être effectué par un technicien de spa licencié ou un électricien qualifié. La défaillance de correctement entretenir ou installer des composants relié au spa peut provoquer des résultats de blessures graves ou la mort. NE PAS retirer la couverture protective de n'importe quelle armoire électrique ou tenter d'entretenir n'importe quel appareil électrique connexe sauf si vous êtes qualifié.

Les Raisons Possible pour les Codes d'Erreurs les Plus Communs

Interrupteur de Pression / Flot ouvert	bas niveau d'eau, cartouche de filtre sale, panne de pompe, obstruction dans la plomberie, échec de la p-Switch, échec du relais de la pompe (reste ouvert), verrouillage de l'air dans la pompe, vanne fermée, ajuste ment inadéquat de la p-Switch
Interrupteur de Pression / Flot fermé	pression statique d'eau, ajustement inadéquat de la p-Switch, échec du relais de la pompe (reste fermé), échec de la p-Switch
Défaut de la Sonde de Température	bas niveau d'eau, défaut de sonde, débranchement de sonde, connexion oxydée, défaut du PCB
Défaut de la Sonde de Haute-Limite	bas niveau d'eau, cartouche de filtre sale, échec de la pompe, obstruction dans la plomberie, échec du relais de la pompe (reste fermé), défaut de la sonde, défaut du PCB
Surchauffe de la température de l'eau	Haute température ambiante, gain thermal causé parce que la pompe fonctionne trop longtemps, échec du relais de la pompe (reste fermé), pompe en mauvaise phase (fonctionne à haute vitesse au lieu de basse vitesse durant les cycles de filtration)

BALBOA pre-M7 Series (plus vieux boîtiers)

OH / HL (solide)	surchauffe- sonde détecte 118°F au chauffe-eau
OH / HL (clignote)	surchauffe - sonde détecte l'eau du spa à 110°F
FLO/ FL (clignote)	interrupteur à pression ouvert, la pompe est en marche
FLC/ FL (solide)	interrupteur à pression fermé, la pompe n'est pas en marche
Cool	température de l'eau est 20°F de moins que la température consignée
ICE / IC	une possibilité de gel a été détectée
Sn1 / Sn	défaut de sonde de haute-limite
Sn3 / Sn	défaut de sonde de température
ILOC	défaut de verrouillage
Pd	aucune puissance au boîtier, fonctionne sur la batterie de secours
SbY / StbY	le spa est en mode de veille

Bien que nous avons fait notre mieux pour assurer l'exactitude de cette information. Les codes d'erreur sur les boîtiers OEM sont sujet au changement sans préavis. Nous ne faisons aucune représentation à l'exactitude ou l'exhaustivité des données et nous ne sommes pas responsables pour les erreurs ou les omissions. Veuillez toujours référer à votre manuel de propriétaire.

©2018

SPA PAKS - Error Codes

This information is NOT intended in any way as a service guide or a means for unqualified persons to service spa equipment - the following is provided for reference only. All service must be performed by a licensed spa technician or a qualified electrician. Failure to properly service or install spa related components can result in serious injury or death. DO NOT remove the protective covers from any electrical enclosure or attempt to service any related electrical device unless you are qualified.

BALBOA M7 Series

OHH / HH / HTR TEMP LMT	overheat - spa has shut down, sensor has detected 118°F at heater
OHS / OH/ SPA TEMP LMT	overheat - spa has shut down, sensor has detected water temp 110°F
ICE / IC	potential freeze condition has been detected
SnA / SA / SENSOR A SERVICE RQD	sensor plugged into 'A' port not working
Snb / Sb / SENSOR B SERVICE RQD	sensor plugged into 'B' port not working
SnS /Sn / SENSOR SYNC	sensors out of balance
HFL / HL / HEATER FLOW LOW	substantial temperature difference between sensors, possible low flow condition
LF / LOW FLOW	displays on the fifth occurrence of "HFL" message within 24 hour period
dr / HEATER MAY BE DRY WILL RETEST SHORTLY	Inadequate water detected in heater, possible dry condition
dry / dy / HEATER DRY SERVICE RQD	inadequate water detected in heater, displays on third occurrence of "dr" message
Pr	priming mode - occurs when spa is powered up
--- / -- / --F / --C	unknown water temperature / temperature not current
PSt / PERSIST FAIL	system PCB persistent memory could not be read / hardware fault
SbY / STANDBY MODE	spa is in standby mode, all automatic functions are stopped
CFE	system configuration/conflict error
SF / SAFETY FAULT	suction protection circuit fault

SPA BUILDERS - LX Series

Sn1	hi-limit sensor fault
Sn2	temp sensor fault
FL1	pressure switch open when pump is on
FL2	pressure switch closed when pump is off
COL	cool condition - water 20°F below set temp
ICE	freeze condition - water temp below 55°F
OH	spa water temperature has reached 110°F
---	watchdog - water temperature has reached 118°F, system is disabled

ELM ENGINEERING LOGISTICS MARKETING

©2018

BOÎTIERS - Codes d'Erreurs

Cette information n'est PAS conçue comme un guide de service ou un moyen pour des personnes non qualifié d'entretenir l'équipement du spa - le suivant est fourni en source informatique seulement. Tout le service doit être effectué par un technicien de spa licencié ou un électricien qualifié. La défaillance de correctement entretenir ou installer des composants relié au spa peut provoquer des résultats de blessures graves ou la mort. NE PAS retirer la couverture protective de n'importe quelle armoire électrique ou tenter d'entretenir n'importe quel appareil électrique connexe sauf si vous êtes qualifié.

BALBOA M7 Series

OHH / HH / HTR TEMP LMT	surchauffe- le spa s'arrête, la sonde a détecté 118°F au chauffe-eau
OHS / OH/ SPA TEMP LMT	surchauffe- le spa s'arrête, la sonde a détecté la température de l'eau à 110°F
ICE / IC	une possibilité de gel a été détectée
SnA / SA / SENSOR A SERVICE RQD	sonde branchée dans le port 'A' ne fonctionne pas
Snb / Sb / SENSOR B SERVICE RQD	sonde branché dans le port 'B' ne fonctionne pas
SnS /Sn / SENSOR SYNC	les sondes sont déséquilibrées
HFL / HL / HEATER FLOW LOW	différence substantielle de température entre les sondes, possibilité d'une condition de bas flot
LF / LOW FLOW	s' affiche sur la cinquième occurrence du message "HFL" durant une période de 24 hr
dr / HEATER MAY BE DRY WILL RETEST SHORTLY	inadéquat d'eau détecté dans le chauffe-eau, possibilité d'une condition de sècheresse
dry / dy / HEATER DRY SERVICE RQD	inadéquat d'eau détecté dans le chauffe-eau, s'affiche sur la troisième occurrence du message "dr"
Pr	en mode d'amorçage - a lieu quand le spa est activé
--- / -- / --F / --C	température d'eau inconnue / n'est pas actuelle
PSt / PERSIST FAIL	la mémoire persistante du système PCB ne peut être lue / défaillance matérielle
SbY / STANDBY MODE	le spa est en mode de veille, toutes fonctions automatiques sont arrêtées
CFE	erreur de configuration/conflit du système
SF / SAFETY FAULT	défaut de sécurité d'aspiration sur le circuit

SPA BUILDERS - LX Series

Sn1	défaut de sonde de haute-limite
Sn2	défaut de sonde de température
FL1	interrupteur à pression ouvert, la pompe est en marche
FL2	interrupteur à pression ouvert, la pompe n'est pas en marche
COL	condition de refroidissement - eau est 20°F au-dessous de la température consignée
ICE	condition de gel- température de l'eau au-dessous de 55°F
OH	la température de l'eau du spa a atteint 110°F
---	chien de garde informatique - la température de l'eau a atteint 118°F, le système est désactivé

ELM Engineering Logistics Marketing

SPA PAKS - Error Codes

This information is NOT intended in any way as a service guide or a means for unqualified persons to service spa equipment - the following is provided for reference only. All service must be performed by a licensed spa technician or a qualified electrician. Failure to properly service or install spa related components can result in serious injury or death. DO NOT remove the protective covers from any electrical enclosure or attempt to service any related electrical device unless you are qualified.

CTI (Correct-Tech)

th1/39	hi-limit sensor fault or open circuit
th2/current temp	temp sensor fault or open circuit
th2/39	both sensors detect water temp below 39°F or open circuit
OH	water temp in spa over 112°F
hot	water temp at heater over 112°F
HL	water temp over 118°F
210	sensor shorted
FLO or — —	pressure switch open, pump on
FLC or — —	pressure switch closed, pump off

GECKO / SPA BUILDERS SUPPORT GROUP - Class Series

FLO	pressure switch open, pump on
FLC	pressure switch closed, pump off
Prr	temp/Regulation sensor fault
Err	software error
HL (solid)	overheat - sensor has detected 118°F at heater
HL (flashing)	overheat - sensor has detected 110°F spa water
FrE or AFP	possible freeze condition detected
•••	3 flashing dots on display = FLO or FLC
•••	3 flashing dots *and* red LED lit on PCB = **HL** (solid)
0.0/32F	temp/Regulation sensor fault
H2O	insufficient water level
CLE / CF	reminder - clean filter
SbY	standby mode—1 hr timeout
LOC / LocF	panel buttons locked
LocP	panel partial lock
Orxx	temp set 'over-range'
CAL	calibration error

Although we have done our best to ensure the accuracy of this information, OEM spa pak error codes are subject to change without notice. We make no representation as to the accuracy or completeness of this data and are not responsible for errors or omissions. Always refer to your owner's manual.

©2018

BOÎTIERS - Codes d'Erreurs

Cette information n'est PAS conçue comme un guide de service ou un moyen pour des personnes non qualifié d'entretenir l'équipement du spa - le suivant est fourni en source informatique seulement. Tout le service doit être effectué par un technicien de spa licencié ou un électricien qualifié. La défaillance de correctement entretenir ou installer des composants relié au spa peut provoquer des résultats de blessures graves ou la mort. NE PAS retirer la couverture protective de n'importe quelle armoire électrique ou tenter d'entretenir n'importe quel appareil électrique connexe sauf si vous êtes qualifié.

CTI (Correct-Tech)

th1/39	défaut de sonde de haute-limite ou circuit ouvert
th2/current temp	défaut de sonde de température ou circuit ouvert
th2/39	les deux sondes détecte que la température de l'eau est en dessous de 39°F ou circuit ouvert
OH	la température de l'eau du spa est au-dessus de 112°F
hot	la température de l'eau au chauffe-eau est au-dessus de 112°F
HL	la température de l'eau du spa est au-dessus de 118°F
210	sonde en court-circuit
FLO ou — —	interrupteur à pression ouvert, la pompe est en marche
FLC ou — —	interrupteur à pression fermé, la pompe n'est pas en marche

GECKO / SPA BUILDERS SUPPORT GROUP - Class Series

FLO	interrupteur à pression ouvert, la pompe est en marche
FLC	interrupteur à pression fermé, la pompe n'est en marche
Prr	défaut de sonde de température / réglementation
Err	erreur de logiciel
HL (solide)	surchauffe- sonde détecte 118°F au chauffe-eau
HL (clignote)	surchauffe - sonde détecte l'eau du spa à 110°F
FrE ou AFP	possibilité de gel a été détecté
•••	3 points clignotant sur l'affichage = FLO ou FLC
•••	3 points clignotant *et* LED rouge illuminé sur le PCB = **HL** (solide)
0.0/32F	défaut de sonde de température/réglementation
H2O	niveau d'eau insuffisant
CLE / CF	rappel- nettoyer la cartouche de filtre
SbY	mode de veille- 1 hr d'interruption
LOC / LocF	boutons du panneau sont bloqués
LocP	bloc partiel du panneau
Orxx	température mise au dessus de la gamme
CAL	défaut de calibrage

Bien que nous avons fait notre mieux pour assurer l'exactitude de cette information. Les codes d'erreur sur les boîtiers OEM sont sujet au changement sans préavis. Nous ne faisons aucune représentation à l'exactitude ou l'exhaustivité des données et nous ne sommes pas responsables pour les erreurs ou les omissions. Veuillez toujours référer à votre manuel de propriétaire.

ELM ENGINEERING LOGISTICS MARKETING

SPA PAKS - Error Codes

This information is NOT intended in any way as a service guide or a means for unqualified persons to service spa equipment - the following is provided for reference only. All service must be performed by a licensed spa technician or a qualified electrician. Failure to properly service or install spa related components can result in serious injury or death. DO NOT remove the protective covers from any electrical enclosure or attempt to service any related electrical device unless you are qualified.

GECKO Aeware Series

FLO / FL-O / rH-nF	no water flow detected
FL-C	pressure switch closed while pump off
Prr / Pr-r / rH-Pr	temp sensor fault
AOH / AO-H / SP-Ot	spa pak internal temp too high
Fr-Er	input frequency (50/60Hz) is out of range
SP-In	input voltage too low
SP-F*x* / F*x*	F1, F2 or F3 fuse is blown
SP-OH / OH	overheat - sensor has detected 108°F spa water
SP-Hr / Hr	internal hardware error
SP-br	breaker setting too low / incorrect input current setting
rH-Hr	heater hardware error in.therm
rH-nH	heater on, no water temp increase
rH-nC	communication error between heater and spa pak
rH-HL / HL	overheat - sensor has detected 119°F at heater
rH-Id	incompatibility between spa pak and heater
Sc	scanning outputs for current draw
Sc-Er	scan error detected / system learning error
P1-Er	system detects no current change with pump-1 on
P2-Er	system detects no current change with pump-2 on
P3/P4/P5-Er	system detects no current change with pump-3, 4 or 5 on
CP-Er	system detects no current change with circ-pump on
bL-Er	system detects no current change with blower on
Fn-Er	system detects no current change with fan on
Fb-Er	fiber optic failure
L*xx* / LL*xx*	low level software setting
UPL / UP-Ld	no low level software loaded
StbY	standby mode
OFF	all outputs off for 30 minutes
rLY	stuck relay

Although we have done our best to ensure the accuracy of this information, OEM spa pak error codes are subject to change without notice. We make no representation as to the accuracy or completeness of this data and are not responsible for errors or omissions. Always refer to your owner's manual.

©2018

BOÎTIERS - Codes d'Erreurs

Cette information n'est PAS conçue comme un guide de service ou un moyen pour des personnes non qualifié d'entretenir l'équipement du spa - le suivant est fourni en source informatique seulement. Tout le service doit être effectué par un technicien de spa licencié ou un électricien qualifié. La défaillance de correctement entretenir ou installer des composants relié au spa peut provoquer des résultats de blessures graves ou la mort. NE PAS retirer la couverture protective de n'importe quelle armoire électrique ou tenter d'entretenir n'importe quel appareil électrique connexe sauf si vous êtes qualifié.

GECKO Aeware Series

FLO / FL-O / rH-nF	aucun flot d'eau détecter
FL-C	interrupteur de pression est fermé pendant que la pompe n'est pas en marche
Prr / Pr-r / rH-Pr	défaut de sonde de température
AOH / AO-H / SP-Ot	température interne du boîtier est trop haute
Fr-Er	fréquence d'entrée (50/60Hz) est hors de portée
SP-In	tension d'entrée est trop bas
SP-F*x* / F*x*	fusible sauté à F1, F2 ou F3
SP-OH / OH	surchauffe - sonde détecte l'eau du spa à 108°F
SP-Hr / Hr	erreur interne de matériel
SP-br	réglage de l'interrupteur est trop bas/ réglage d'entrée actuel est incorrect
rH-Hr	erreur de matériel du chauffe-eau in.therm
rH-nH	chauffe-eau fonctionne, température de l'eau n'augmente pas
rH-nC	erreur de communication entre le chauffe-eau et le boîtier
rH-HL / HL	surchauffe- sonde détecte 119°F au chauffe-eau
rH-Id	incompatibilité entre le boîtier et le chauffe-eau
Sc	sorties sont scanner pour determiner le courant absorbé
Sc-Er	détection d'erreur du scan / erreur de fonction sur le réseau
P1-Er	système ne détecte aucun changement de courant quand la pompe-1 fonctionne
P2-Er	système ne détecte aucun changement de courant quand la pompe-2 fonctionne
P3/P4/P5-Er	système ne détecte aucun changement de courant quand la pompe-3,4 ou 5 fonctionne
CP-Er	système ne détecte aucun changement de courant quand la pompe de circ. fonctionne
bL-Er	système ne détecte aucun changement de courant quand le souffleur fonctionne
Fn-Er	système ne détecte aucun changement de courant quand le ventilateur fonctionne
Fb-Er	échec de fibre optique
L*xx* / LL*xx*	bas niveau de réglage du logiciel
UPL / UP-Ld	aucun chargement de bas niveau de logiciel
StbY	mode de veille
OFF	toutes les sorties sont éteintes pendant 30 minutes
rLY	relais bloqué

Bien que nous avons fait notre mieux pour assurer l'exactitude de cette information. Les codes d'erreur sur les boîtiers OEM sont sujet au changement sans préavis. Nous ne faisons aucune représentation à l'exactitude ou l'exhaustivité des données et nous ne sommes pas responsables pour les erreurs ou les omissions. Veuillez toujours référer à votre manuel de propriétaire.

©2018

SPA PAKS - ERROR CODES

SPA PAKS - Error Codes / BOÎTIERS - Codes d'Erreurs

This information is NOT intended in any way as a service guide or a means for unqualified persons to service spa equipment - the following is provided for reference only. All service must be performed by a licensed spa technician or a qualified electrician. Failure to properly service or install spa related components can result in serious injury or death. DO NOT remove the protective covers from any electrical enclosure or attempt to service any related electrical device unless you are qualified.

WATERWAY / ACC

CoLd	temperature in the spa heater housing is below 40°F
OH	over heat - spa water is at a temperature above 108°F
HLEr	hi-limit over heat / sensor fault
SEoP	temp sensor open circuit
SESH	temp sensor short circuit
PSoC	pressure switch open with circ-pump
PSoL	pressure switch open with lo-spd pump
PSoH	pressure switch open with high-spd pump
ToE	time out error - system shut down

BRETT AQUALINE

OH	temp exceeds 118°F
Fr	freeze condition - temp < 40°F
FL	pressure switch fault
EO	temp sensor shorted
E1	temp sensor open
E2	hi-limit sensor shorted
E3	hi-limit sensor open
E4	flow switch shorted
E7	improper electrical connection

BOÎTIERS - CODES D'ERREURS

WATERWAY / ACC

CoLd	la température dans le boîtier du chauffe-eau du spa est au-dessous de 40°F
OH	surchauffe- l'eau du spa est à une température au-dessus de 108°F
HLEr	surchauffe de haute-limite / défaut de sonde
SEoP	la sonde de température a un circuit ouvert
SESH	court-circuit de la sonde de température
PSoC	interrupteur de pression ouvert avec la pompe de circulation
PSoL	interrupteur de pression ouvert avec la pompe à basse vitesse
PSoH	interrupteur de pression ouvert avec la pompe à haute vitesse
ToE	erreur de pause - arrêt du système

BRETT AQUALINE

OH	température dépasse 118°F
Fr	condition de gel - la température est au-dessous de 40°F
FL	défaut d'interrupteur à pression
EO	court-circuit de la sonde de température
E1	la sonde de température est ouverte
E2	court-circuit de la sonde de haute-limite
E3	sonde de haute-limite est ouverte
E4	court-circuit de l'interrupteur de flot
E7	connexion électrique incorrect

Cette information n'est PAS conçue comme un guide de service ou un moyen pour des personnes non qualifié d'entretenir l'équipement du spa - le suivant est fourni en source informatique seulement. Tout le service doit être effectué par un technicien de spa licencié ou un électricien qualifié. La défaillance de correctement entretenir ou installer des composants relié au spa peut provoquer des résultats de blessures graves ou la mort. NE PAS retirer la couverture protective de n'importe quelle armoire électrique ou tenter d'entretenir n'importe quel appareil électrique connexe sauf si vous êtes qualifié.

©2018

Can't find what you're looking for? Contact us...we'll try our best to find it for you!

Thermowells - p. 35

THERMOSTATS / HIGH-LIMITS

THERMOSTAT - MECHANICAL

Part No.	Description
4-10-1926A	Capillary: 12" Bulb: 1/4" x 3-3/4"
4-10-1926B	Capillary: 36" Bulb: 1/4" x 3-1/2"
4-10-1926C	Capillary: 48" Bulb: 5/16" x 3-1/2"

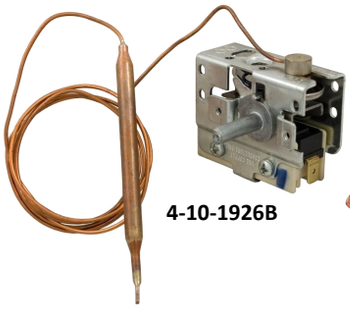

4-10-1926B

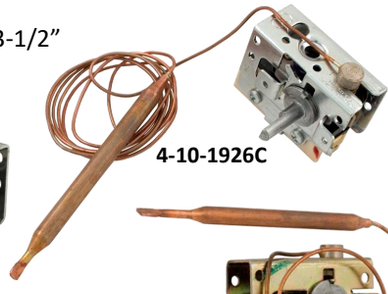

4-10-1926C

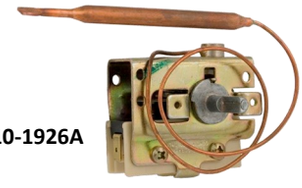

4-10-1926A

THERMOSTAT - ELECTRONIC

Part No.	Description
4-10-TMETS1000-120040LP	Capillary: 40" Bulb: 5/16" x 2-1/16" Pilot duty: 120V, 5A SPST

requires a contactor

HIGH LIMIT - MECHANICAL

Part No.	Description
4-10-1921B	Capillary: 12"* Bulb: 5/16" x 3-1/2" * vinyl coated capillary
4-10-1921A	Capillary: 36" Bulb: 1/4" x 4-1/8"

4-10-1921A

4-10-1921B

HIGH LIMIT - THERMODISC

Part No.	Description
4-10-1923A	Surface mount

T-STAT / H-LIMIT MISC.

CTI **Mechanical Spa Paks** - p. 2

Part No.	Description
4-10-1925	Thermostat Knob
4-40-0201	Capillary Cover

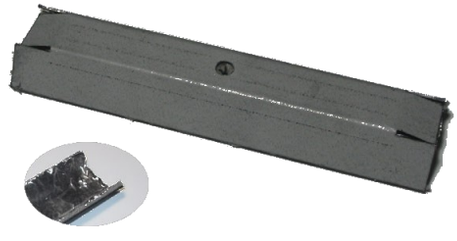

©2018

THERMOWELLS

THERMOWELLS / SENSOR MOUNTS

Item	Part No.	Description
1	4-10-1803	Sensor Mount - 1/2”fpt
2	4-60-WW400-4420	White - fits 1/4” probe
3	4-60-WW400-4380	Holder - open- fits 3/8” probe
4	4-10-THP78-30206	SS, 5/16"ID x 8.0"L, 1/2"npt
5	4-10-HQ090044A	Fits 3/8” probe, 1-1\4” hs

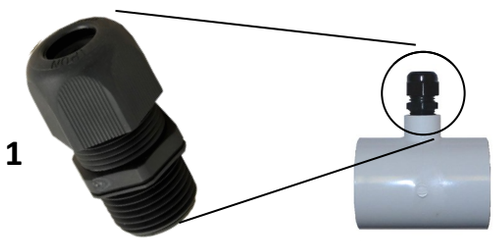

(tee not included)

adjustable length
includes
rubber
sealing nut

TECH NOTE
4-10-1803 fits 5/16” and 3/8” sensor bulbs.
Fits Elbows and Tees that have a 1/2”fpt port (p. 57 & 60).

THERMOWELL ELBOWS

Part No.	Description
4-60-WW400-5580	1.5” single-well
4-60-WW400-5540	1.5” double-well
4-60-WW400-6040	2.0” single-well; air bleed
4-60-WW805-0014	Air bleed o-ring

400-5580

400-5540

400-6040

©2018

PRESSURE / VACUUM / FLOW / SWITCHES

PRESSURE SWITCHES

Part No.	Description
4-10-LG800120-3	800120-3, 1/8"mpt 21A, Plastic, LG
4-10-LG800125-3	800125-3, 1/8"barb 21A, Plastic, LG
4-10-TM4010P-AM	4010P, 1/8"mpt, 21A
4-10-TM3902	3902, 1/8"mpt, 1A pilot duty (replaces 3903-DE)
4-10-TM3029	3029, 1/8"mpt, 25A, Stainless Steel
4-10-TM3029P	3029P, 1/8"mpt, 25A, Plastic
4-10-TM3028	3028, 1/8"barb, 25A, Stainless Steel
4-10-TM3035	3035, 1/8"mpt, 25A, 10PSI, Stainless Steel
4-10-GEC510AD0167	DTEC-1, 1/8"mpt, Gecko, 0.4VA
1-BAL21224	P-switch cable - fits Balboa & Spa Builders
1-GEC9920-400124	P-switch cable - Gecko MSPA & TSPA

FLOW SWITCHES

Part No.	Description
4-10-HWQ12DS-KIT	Flow switch KIT* 1/2"mpt, includes 1/2" strain-relief, 1/2"fpt coupler (* fits 1.5" and 2.0" tee only)
4-10-HW6560857	Flow switch 3/4"mpt in transparent tee; 3/4"b
4-10-HW6560860	Flow switch 3/4"mpt in transparent tee; Sundance; 3/4"b x 3/4"b x 3/8" barb

* See p. 60 for s x s x fpt tee fittings

VACUUM SWITCHES

Part No.	Description
4-10-PATVS12506E	1/8"MPT, 21A, plastic
4-10-TMV4003P-DX	1/8"MPT, 21A, plastic

©2018

TRANSFORMERS

CTI Mini Max Spa Paks - p. 1

TRANSFORMERS - CTI

Item	Part No.	Description
1	4-10-1931B	120V/12V 1.6A
--	4-10-1931B-SADSC	Digital Signetic 1.6A - w/connectors
3	4-10-1931B-SAMECH	Mechanical Pak 1.6A - w/connectors
4	4-10-1931B-SAMMD	Mini Max Digital 1.6A - w/connectors
6	4-10-1932C	3.0A - w/connectors
--	4-10-1932D	230V/12V 2.0A TUV - no connectors

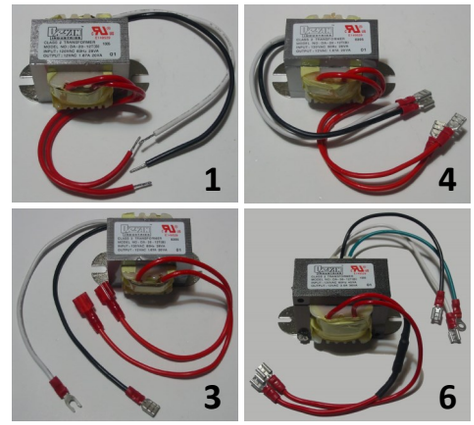

TECH NOTE If a Mini Max spa pak has off-board relays, it requires a 3A transformer.

TRANSFORMERS - BALBOA

Balboa Spa Paks - p. 16

Part No.	Description
4-10-30274-1	120V 9-pin; for 120V Duplex systems
4-10-30274-2	120V 9-pin; for 240V Duplex systems
4-10-30270-1	120V/15VAC; 6-pin
4-10-30270-2	240V/15VAC; 6-pin

TRANSFORMERS - GECKO

Gecko Spa Paks - p. 19-20

Part No.	Description
4-10-GEC9920-100212	120V; Kit - MSPA-MP/TSPA-MP/TSPA-1
4-10-GEC9920-100225	240V; Kit - MSPA-MP/TSPA-MP/TSPA-1
4-10-GEC560AA0427	120V, 30VA; S-CLASS; PCB mount
4-10-GEC560AA0430	240V, 30VA; S-CLASS; PCB mount

TECH NOTE The transformer kit s include the 5-pin connector for the MSPA-MP/TSPA-MP and the 7-pin connector for the TSPA-1

TRANSFORMER - SPA BUILDERS

Spa Builders parts - p. 24

Part No.	Description
1-SBS5-30-0052	220V w/plug; LX-10 & LX-15

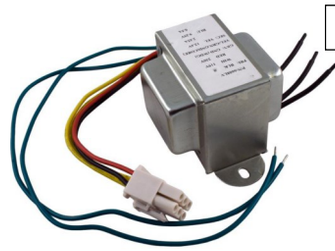

©2018

CTI **Mechanical Spa Paks** - p. 2

RELAYS & CONTACTORS

RELAYS - SPST

Part No.	Description
4-10-1729	Relay 30A SPST 120V Coil
4-10-1729B	Relay 30A SPST 240V Coil
4-10-1729C	Relay 30A SPST 12VDC Coil

RELAYS - DPDT

Part No.	Description
4-10-1730	Relay 30A DPDT 120V Coil
4-10-1731	Relay 30A DPDT 240V Coil

Relay Terminal Connections
1 + 0 = coil
3 + 7 = Voltage IN
2 + 6 = NO (normally open) Voltage OUT
4 + 8 = NC (normally closed) not used

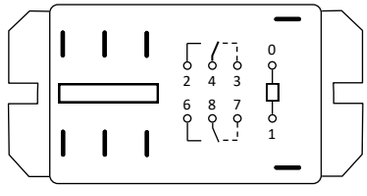

May also be substituted with PN# 4-10-0201-SA contactor retro kit

CONTACTORS

TECH NOTE Always check the contactor rating. NEVER replace a 50A rated contactor with a 30A rated contactor! If in doubt, use a 50A.

Item	Part No.	Description
1	4-10-0201	120V Contactor 50 Amp Double Pole
1	4-10-0202	240V Contactor 50 Amp Double Pole
2	4-10-0201-SA	Contactor 50 Amp Double Pole Retro Kit (includes 2 contactors, fuse holders and wiring)

1

2

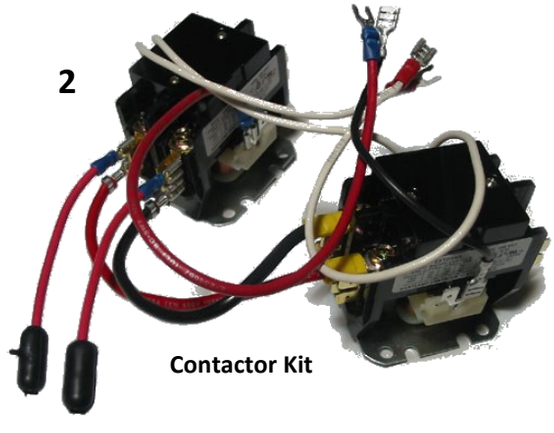

Contactor Kit

p: 905.670.5387 f: 905.670.5389 t: 888.502.6960 info@elmsalesandequipment.com
©2018

TIMERS - MECHANICAL

TIMERS

Part No.	Description
4-10-1929A	24 Hour, 120V, SPDT
4-10-1929	7 Day, 120V, SPDT

TECH NOTE panel mount timers can be wired NO or NC

24 hour

7 Day

LED INDICATORS & PANEL BACKLIGHTS

LED INDICATOR / PILOT LIGHT

Spa Lights / Housings / LEDs / Controllers - p. 45

Part No.	Description
4-10-1511A	LED indicator, 240V, Red, 5mm
4-10-0604	Adapter Grommet

4-10-1511A

4-10-0604

PANEL BACKLIGHT - BALBOA

Part No.	Description
1-BAL10226	Topside Panel Backlight

TERMINALS / LUGS

TERMINAL BLOCKS

Part No.	Description
4-10-1912	3-pos terminal strip
4-10-1908	4-pos Terminal Block

4-10-1912

4-10-1908

GROUND/BONDING LUGS

Part No.	Description
4-10-0102A	4-Pos. ground bus bar
4-10-0100	5-Pos. ground bus bar
4-10-0101A	Ground lug

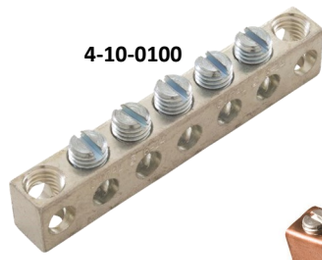

4-10-0100

4-10-0102A

4-10-0101A

©2018

SWITCHES - AIR & ROCKER

AIR SWITCHES

Part No.	Description
4-10-TMTBS301	25A, SPDT, latching
4-10-TMTBS317	20A, DPDT, latching

TBS317

TBS301

ROCKER SWITCH

Part No.	Description
4-10-1813	SPST - NO/NC (timer by-pass)

STRAIN RELIEF

STRAIN RELIEF

Part No.	Description
4-10-1803	cord strain relief, liquid tight, 1/2" mpt

AUDIO/VIDEO - POWER SUPPLY & SPEAKERS

POWER SUPPLY - A/V

PN# 4-10-PRO-SP9

Input: 115/230VAC
Output: 13.8VDC/10A/130W

12VDC Power Supply

SPEAKER - POP-UP

Part No.
4-60-WW676-0319-DSG
Colour
Dark Silver Glitter

Limited quantities of
other colours available

©2018

ELM Engineering Logistics Marketing®

CRIMP TERMINALS / AMP CONNECTORS

BORNES DE SERTISSAGE/CONNECTEURS À BROCHES

TERMINALS & CONNECTORS

CRIMP TERMINALS & CONNECTORS

ItemNo.	Part No.	Description
		MALE DISCONNECTS
1	4-10-1907B	Red, insulated, .250, 22-18 Ga.
		FEMALE DISCONNECTS
2	4-10-1907C	Red, insulated, .250, 22-18 Ga.
3	4-10-1907	Red, .250, 22-18 Ga.
4	4-10-1904	Red, .187, 22-18 Ga.
5	4-10-1904B	Red, .110, 22-18 Ga.
6	4-10-1909A	Blue, .250, 16-14 Ga.
7	4-10-1906	Blue, .187, 16-14 Ga.
8	4-10-1916B	Yellow, .250, 12-10 Ga.
		PIGGYBACK DISCONNECTS
9	4-10-1914	Red, .250, 22-18 Ga.
10	4-10-1909	Blue, .250, 16-14 Ga.
		RING TERMINALS
11	4-10-1907A	Red, 22-18 Ga.
12	4-10-1902	Blue, 16-14 Ga.
13	4-10-1916	Yellow, 12-10 Ga.
		SPADE (FORK) TERMINALS
14	4-10-1905	Red, 22-18 Ga.
15	4-10-1901	Blue, 16-14 Ga.
16	4-10-1915	Yellow, 12-10 Ga.
		BUTT SPLICE CONNECTORS
17	4-10-1913	Red, 22-18 Ga.
18	4-10-1910A	Blue, 16-14 Ga.
19	4-10-1916A	Yellow, 12-10 Ga.

AMP CONNECTORS - HOUSINGS & PINS

ItemNo.	Part No.	Description
20	4-10-2002M	2 Pin, Male, AMP, Plug Housing, ea.
21	4-10-2003M	3 Pin, Male, AMP, Plug Housing, ea.
22	4-10-2004M	4 Pin, Male, AMP, Plug Housing, ea.
23	4-10-2002F	2 Pin, Female, AMP, Cap Housing, ea.
24	4-10-2003F	3 Pin, Female, AMP, Cap Housing, ea.
25	4-10-2004F	4 Pin, Female, AMP, Cap Housing, ea.
26	4-10-2001M	Pin, Male, AMP, 14-20 AWG, 25-pk
27	4-10-2001F	Pin, Female, AMP, 14-20 AWG, 25-pk
28	4-10-2005	Tool, AMP Pin Extractor
29	4-10-2007	Tool, AMP Pin Crimper

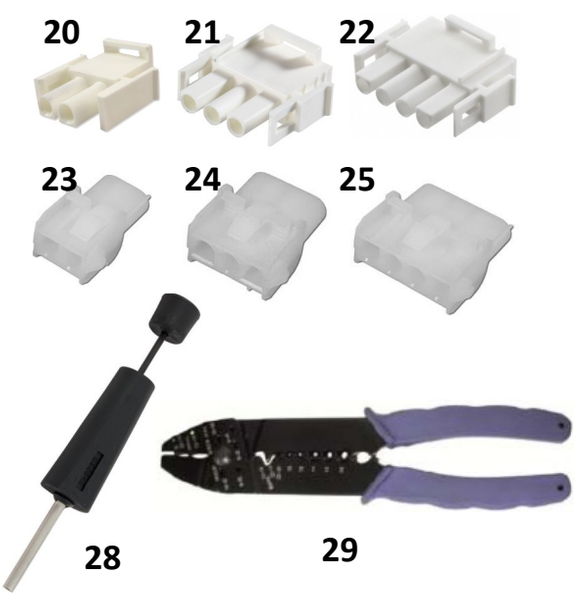

AMP Pins sold in QTY 25

©2018

PLUGS & RECEPTACLES

J&J MINI PLUGS & RECEPTACLES

TECH NOTE Always confirm receptacle voltage! Plugs and Receptacles may be used for voltages and applications that are different from what is indicated.

		Part No.
PUMP 2-SPD	(F)	4-10-1704
	(M)	4-10-0206
PUMP 1-SPD	(F)	4-10-1705
	(M)	4-10-0203
CIRC PUMP	(F)	4-10-1703
	(M)	4-10-0205
BLOWERS	(F)	4-10-1701 (**120V**)
	(M)	4-10-0204-SA
	(F)	4-10-1706 (**240V**)
	(M)	4-10-0207-SA
OZONE	(F)	4-10-1702
	(M)	4-10-0209A
LIGHT	(F)	4-10-1718
	(M)	4-10-0219
HEATER	(F)	4-10-1715
	(M)	4-10-0216A

CORDS / CABLES

AMP CORDS

Part No.	Description
4-10-301001C	Cord, AMP-4 male, 14/4 wire, 15A, 31"
4-10-5505006	Cord, AMP-4 male, 14/3 wire, 15A, 72”
4-10-300015	Cord, AMP-4 male, 16/3 wire, 13A, 48"
1-BAL21089	Cord, AMP-2 male, 12V light, 96”

CORDS - GECKO - in.XE / in.XM (IN.LINK)

Part No.	Description
	KITS
4-10-GEC9920-101436	240V; 2 HC, 2 LC, Light
4-10-GEC9920-101439	120V; 2 HC, 1 LC, Light
1-GEC9920-101477	Adapter KIT, AMP-M to JJM-F
	INDIVIDUAL CORDS
1-GEC600DB0721	240V, LC, 48”, BL/OZ/CP
1-GEC600DB1226	120V, LC, 96”, BL/OZ/CP
1-GEC600DB0833	240V, HC, 96”, BL/1-spd pump
1-GEC600DB0857	120V, HC, 96”, BL/1-spd pump
1-GEC600DB0692	240V, HC, 48”, 2-spd pump
1-GEC600DB0821	240V, HC, 96”, 2-spd pump
1-GEC9920-401239	120V, HC, 96”, 2-spd pump
1-GEC9920-401022	12V, 2A, 144”, Light cord

LIGHT CORD - Generic

Part No.	Description
4-10-0208	Cord - 12V Light

©2018

FUSES / FUSE HOLDERS / MINI BREAKER

FUSES

Part No.	Description	OEM Part No. GECKO	OEM Part No. BALBOA
	3/16" x 3/4" (5 x 20mm)		
4-10-0513	0.75A (750mA) S-Class transformer	430AD0066	— — —
4-10-0514	1A M-Class transformer	430AD0134	— — —
4-10-0515	2A, glass, GMA	430AD0057	— — —
	1/4" x 1-1/4" (6.3 x 32mm)		
4-10-0501J	0.3A (3/10A) - Balboa trans	— — —	21581
4-10-0501D	0.5A glass in.xe & Y-series F4	430AC0222	— — —
4-10-0501H	0.6A CTI miss-wire fuse	— — —	— — —
4-10-0501G	1A glass, 3AG, time-delay	430AC0092	— — —
4-10-0501A	1.5A glass	— — —	— — —
4-10-0501F	2A glass, 3AG	430AC0103	— — —
4-10-0501B	3A glass, fast blow	430AC0117	20600
4-10-0501K	5A glass, fast blow	— — —	— — —
4-10-0501E	10A glass, 3AG, time-delay, blower	430AC0069	30122
4-10-0501	20A ceramic	— — —	30123
4-10-0510	30A ceramic, slo-blo	— — —	— — —
	3/8" x 1-3/8" (9.5 x 35mm)		
4-10-0505	20A SC-20 time-delay	430AE0027	30142
	3/8" x 1-5/8" (9.5 x 41mm)		
4-10-0506	25A SC-25 time-delay	430AE0033	30137
4-10-0507	30A SC-30 time-delay	430AC0186	30136

TIME-DELAY FUSES

1-1/4" FUSES

3/4" FUSES

FUSE-HOLDERS

Item	Part No.	Description
1	4-10-0502A	Fuse Holder - in-line, raw leads
2	4-10-0502A-SA	Fuse Holder - in-line, terminated
3	4-10-0502	Fuse Holder - MDA, panel mount
4	4-10-0508	Fuse Holder - SC, 30A, box mount
5	4-10-0509	Fuse Holder - MDA, box mount (30128)
6	4-10-0511	Fuse Holder - SC-20, panel mount
7	4-10-0512	Fuse Holder - SC-25 & SC-30, panel mount

MINI BREAKER

Part No. 4-10-0102

Breaker 20 Amp
for Jet Stream 5000

©2018

GROUND FAULT CIRCUIT INTERRUPTERs - GFCIs

GFCIs

Item	Part No.	Description
1	4-10-0605	GFCI 60A w/Sub-Panel, Siemens
	4-10-0607	GFCI 50A w/Sub-Panel, Siemens
	4-10-0606	GFCI 40A w/Sub-Panel, Siemens
	4-10-0609	GFCI 30A w/Sub-Panel, Siemens
	4-10-0600	GFCI 20A w/Sub-Panel, Siemens
2	4-10-0608A	GFCI 15A, Wall Plug, no cord, Tower
3	4-10-0608B	GFCI 15A, c/w 15ft 14/2 Outdoor Cable
4	4-10-0504	GFCI 20 Amp, SPST, Deadfront, Leviton

1

2

3

4

©2018

LIGHTS

SloanLED Leaders in LED Technology

SPA LIGHTS - LED

Part No.	Description
4-10-SLO701861*	UltraBRITE stand-alone Mini LED, bi-pin, 9 colour modes
4-10-SLO701898	LiquaLED Multi-Zone Controller; 4 output zones, up to 100 points of light including cluster(s)
4-10-SLO701678	LiquaLED Control 40; small controller, up to 40 points of light + cluster
4-10-SLO701570-21-DL	21-LED, for 5" lights, daisy chain, no stand-off
4-10-SLO701570-21-DLSO	21-LED, for 5” lights, daisy chain, with stand-off
4-10-SLO701564-1	Single-LED, RGB, daisy chain assy
4-10-SLO701564-2	Dual-LED, RGB, daisy chain assy
4-10-SLO701564-4-DLO-XL	Quad-LED, RGB, daisy chain assy
4-10-SLO410117-60	Daisy Chain Jumper, 5ft

410117-60

701564-1

701564-2

MODE FUNCTIONS

- **Slow colour change** – fades from one colour to the next through the colour spectrum
- **White**
- **Cayan**
- **Magenta**
- **Blue**
- **Yellow**
- **Green**
- **Red**
- **White strobe**

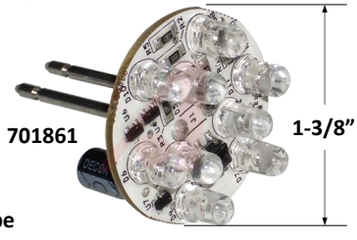

plugs into a standard spa light socket
*** separate controller not required**

701898

701678

701570-21

SPA LIGHTS

Part No.	Description
4-60-WW630-5005	3-1/2” Standard Light housing, reflector, lenses
4-60-WW630-K005	5” Jumbo Light housing, reflector, lenses
4-60-WW630-0008	2-1/8” Mini Light housing & reflector
4-60-WW630-5008	3-1/2” Standard Light housing & reflector
4-60-WW630-6028	3-1/2” Front-Access Light housing & reflector
4-60-WW630-K008	5” Jumbo Light housing & reflector
4-60-WW630-0005	Light lenses; red & blue - fit Std & Jumbo
4-60-GE912	12V, 12W wedge-base spa light bulb
4-60-RD631-9LKIT	9” light replacement kit - Arctic +
4-60-RD631-1070	3-1/4” RD Light, 2-5/8”hole size

RD631-9LKIT

630-5008

630-K008

630-5005

630-0008

GE 912

©2018

Heater **O-Ring/Gaskets** - p. 54 & 99

HEATER MANIFOLD ASSEMBLIES

HEATER MANIFOLD REPLACEMENTS - CORRECT-TECH (CTI)

CTI Sensors - p. 7

Part No.	Description	Dimension
1-205LR	1.0kW 120V: retrofit; replaces 1-205L and 1-205RA; Microtech only	1.5"x10"
1-THP2400-2311*	4.0kW 240V, center-terminal, Tuff Tub, Ingenious Products	2.0"x11"
1-HQ26-2300-5S-K	4.0kW 240V, center-terminal, Mini Max Digital Replaces 1-THP2400-2300ET	2.0"x12.5"
1-206	4.0kW 240V, Digital Signetic, Jetstream 5000	2.0"x15"
1-206A	4.0kW 240V, Mini Max Digital	2.0"x15"
1-209	5.5kW 240V, Digital Signetic, Jetstream 5000	2.0"x15"
1-209A	5.5kW 240V, Mini Max Digital	2.0"x15"

*** Limited QTY Available.**

2400-2311

26-2300-5S-K

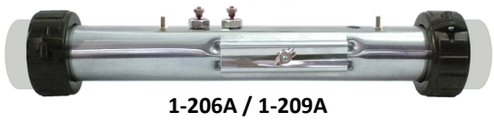

1-206A / 1-209A

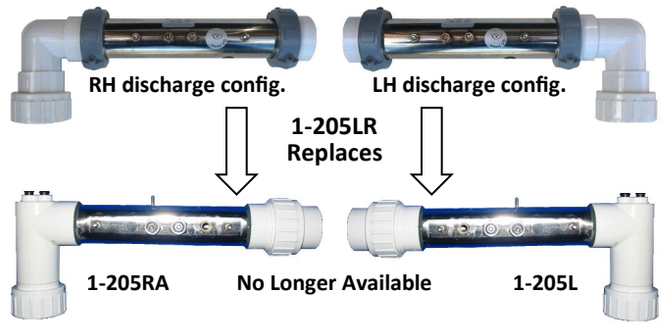

HEATER MANIFOLD REPLACEMENTS - GECKO

Gecko Sensors - p. 21

Part No.	Application	Replaces	OEM Part No.
	Includes p/sw and htr wires		
1-ELM9920-100338	S-Class 4.0kW	1-THP2400-0800-2	9920-100338
1-ELM9920-100339	S-Class 5.5kW	1-THP2550-0800-2	9920-100339
1-ELM9920-100346	M-Class 4.0kW	1-THP2400-0601-2	9920-100346
1-ELM9920-100347	M-Class 5.5kW	1-THP2550-0601-2	9920-100347
	No p/sw and htr wires		
1-ELM9920-100338-A	S-Class 4.0kW	1-THP2400-0800-ET	
1-ELM9920-100339-A	S-Class 5.5kW	1-THP2550-0800-ET	
1-ELM9920-100346-A	M-Class 4.0kW	1-THP2400-0601-ET	
1-ELM9920-100347-A	M-Class 5.5kW	1-THP2550-0601-ET	
	Aeware		
1-GEC9920-101435	IN.XE - 4.0kW, incl. sensors		9920-101435
1-GEC0603-416001	IN.XM - 4.0kW, remote htr.		0603-409001

S-Class

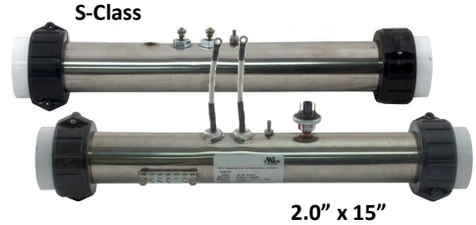

2.0" x 15"

M-Class

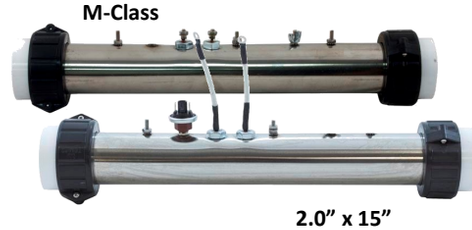

2.0" x 15"

IN.XM

2.0" x 14.5"

IN.XE

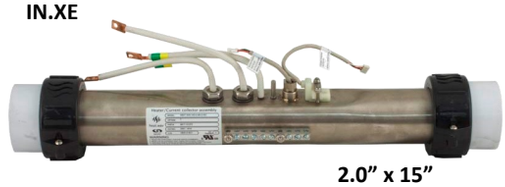

2.0" x 15"

©2018

HEATER MANIFOLDS - BALBOA

COLLECTEURS CHAUFFANTS - BALBOA

HEATER MANIFOLD ASSEMBLIES

Balboa Sensors - p. 15

HEATER MANIFOLD REPLACEMENTS - BALBOA

TECH NOTE ELM offers 2 convenient ways to purchase replacement Balboa heater assemblies: Populated - includes sensor(s) and/or pressure switch & tailpieces; Unpopulated - heater element only, no sensor(s) and/or pressure switch, no tailpieces

Part No.	Description	Dimension
	PRESSURE SWITCH (NON-M7) APPLICATIONS	
1-BAL50069	1.0kW 120V *Limited QTY Available* Replaces 50075, 58025	1.5"x 8.5"
1-BAL50081	4.0kW 240V	2.0"x15"
1-BAL50067	4.0kW 240V, includes p-sw Replaces 50142, 58081, 50143, 50067, 50081, 58111	2.0"x15"
1-BAL50080	5.5kW 240V	2.0"x15"
1-BAL50096	5.5kW 240V, includes p-sw Replaces 50071, 50076, 50134, 50150, 58015, 50096, 50080	2.0"x15"
1-BAL58029	4.0kW 240V, Value & LE	2.0"x15"
1-BAL58048	4.0kW 240V, Value & LE; with sensor & p-sw Replaces 58067, 58009, 58028, 53349, 58048, 58029, 58056	2.0"x15"
1-BAL58027	5.5kW 240V, Value & LE	2.0"x15"
1-BAL58019	5.5kW 240V, Value & LE, with sensor & p-sw Replaces 58074, 58026, 58066, 58019, 58027	2.0"x15"
	DUAL-SENSOR (M7) APPLICATIONS	
1-BAL58103	4.0kW 240V, w/studs	2.0"x15"
1-BAL58031	4.0kW 240V, w/studs, includes sensors Replaces 58106, 58117, 55625, 58120, 58212, 58109, 58104, 58032, 58031, 58103	2.0"x15"
1-BAL58002	5.5kW 240V, w/studs	2.0"x15"
1-BAL58083	5.5kW 240V, w/studs, includes sensors Replaces 58010*, 58089, 58064, 58086, 58105, 58000, 58209, 58123, 58121, 58016, 58140, 55032, 55302, 55473, 58023, 58083, 58002	2.0"x15"
1-BAL58010	5.5kW 240V, no studs, includes sensors, LE M7 & Value M7	2.0"x15"
1-BAL55691	4.0kW 240V, with sensors, BP1500 / Revolution	2.0"x18"
1-BAL58203	4.0kW 240V / 1.0kW 120V, with sensors & Amp plug, VS100	1.5"x10"

58031 / 58083
58010 (has no studs)

58203

55691

50067 / 50096

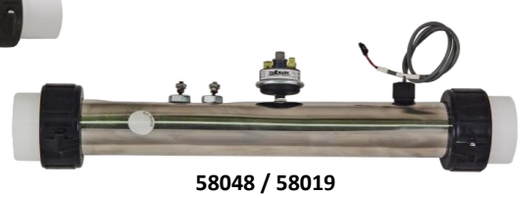

58048 / 58019

50069

©2018

IMPORTANT NOTE Therm Products is no longer in business. Some of the heater products they manufactured are now being made by other companies. Items marked by an asterisk (*) are currently not in production. Availability is limited to stock on hand. Contact ELM for assistance.

Heater **O-Ring/Gaskets** - p. 54 & 99

HEATER MANIFOLD ASSEMBLIES

HEATER MANIFOLDS - FLOW-THRU - OEM Replacements

...continues...

Part No.	APPLICATION	Description	Dimension
1-HQ48-9123-7T-K	**Arctic**, 2001+ Replaces **1-THP2550-5251**, A2550-5251ET, A2550-5250ET, A2550-5200ET, A2550-5100ET, 22-00254, 22-00255 / 256	5.5kW 240V 90˚in, 45˚out, 48" cord w/plug	2.0"x12"
1-HQ48-9121-7S-K	**Arctic**, 2005+ Replaces **1-THP2550-5350**, A2550-5350ET, A2550-5300ET	5.5kW 240V 90˚in, 48" cord w/plug	2.0"x12"
1-HQ48-9120-7P-K	**Arctic**, 2007+ Replaces **1-THP2550-0103**, C2550-0103TT, C2550-0103Z	5.5kW 240V Flow thru, 48" cord w/plug	2.0"x12"
1-THP2500-3600*	**Coast**, dual-element, 5.0kW Replaces C2500-3600ET-G, C2550-3600ET-G	4.0kW + 1.0kW 240V Dual-element	3.0"x15"
1-THP2450-3101*	**Coast**, single-element	4.5kW 240V	3.0"x15"
1-HQ26-2001-7S-K	**Cal Spa**, w/o box, generic Replaces **1-THP2550-2001**, 9145-012 ,C2550-2001	5.5kW 240V	2.0"x15"
1-HQ26-0011-7S-K	**Cal Spa**, w/o box, generic Replaces **1-THP2550-0011**, C2550-0011, HEA14100121	5.5kW 240V	2.0"x15"
1-HQ26-0155-7S-K	**Hercules**, pre-95 XT Replaces **1-THP2550-0155**, C2550-0155, C2550-0157, C2550 -0154, 48-3300-10-154H; 48-3300-10-155H	5.5kW 240V	2.0"x18"
1-SC-B24040E	**Hydro-Quip** pre-97 **/ Brett** EM100, EM190 Replaces **1-THP2400-0315**, C2400-0315, 12077	4.0kW 240V	2.0"x15"

*** No Longer Available.**

Pressure/Vacuum/Flow Switches - p. 36

Heater Buttresses - p. 54 & 99

©2018

AVIS IMPORTANT Therm Product n'est plus en affaire. Certains chauffe-eaux qu'ils ont fabriqués sont maintenant faits par d'autres compagnies. Les items marqués par un astérisque (*) ne sont pas couramment en production. La disponibilité est limitée à la quantité en main. Contactez ELM pour une assistance.

HEATER MANIFOLD ASSEMBLIES

Heater **O-Ring/Gaskets** - p. 54 & 99

HEATER MANIFOLDS - FLOW-THRU - OEM Replacements

Part No.	APPLICATION	Description	Dimension
1-HQ26-0071-K	**HydroQuip**, 5/97 - current Replaces **1-THP2550-0307**, C2550-0307ET, 20-00227, 20-00328, AQT2000328, 22159, 26-0032	5.5kW 240V	2.0"x15"
1-THP1100-0115*	**Icon / JumpKing** Replaces C1100-0115, 11676, 48-3400-30-01-012	1.0kW 120V	1-7/8"x8.5"
1-THP2550-0316*	**Jacuzzi** J400, 2006+ Replaces C2550-0316TI	5.5kW 240V Titanium, w/48" cord	2.0"x12"
1-THP2550-0071*	**LA / Advanced** Replaces B24055LA, 48-3300-10-071H	5.5kW 240V	2.0"x15"
1-THP2550-0119*	**Sundance/Jacuzzi** Replaces C2550-0119, SUNDANCE, 610971, 20-00490, MARQUIS, 21835, 48-3300-10-119H	5.5kW 240V Curved 'L' shape	2.0"x15"
1-SBS2-00-0052	**Spa Builders** LX-10/AP-4	5.5kW 240V	2.0"x12"
1-SBS2-00-0013	**Spa Builders** LX-15/LX-35/AP-1/EP-1	5.5kW 240V	2.0"x15"
1-SBS2-00-0109	**Spa Builders** LX-15/LX-35/AP-1/EP-1	5.5kW 240V TEFLON	2.0"x15"
1-HQ26-1008-6S-K	**Vita / DM Industries** Replaces **1-THP2450-1008**, C2450-1008ET, VIT411092	4.5kW 240V	2.0"x17.75"
1-HQ26-1008-7S-K	**Vita / DM Industries** Replaces **1-THP2550-1008**, C2550-1008ET, 609884	5.5kW 240V	2.0"x17.75"
1-THP2400-0310*	**Waterway**, Signature Series W1000, W2000 Replaces C2400-0310	4.0kW 240V	2.0"x15"
1-ELM9920-100347	**Watkins/Caldera**, Gecko M-Class Replaces **1-THP2550-0601-2**, C2550-0601ET, B24055LAS, B24055LASD, B24055U, 20-00250/251/249/270	5.5kW 240V incl. p/sw & htr wires	2.0"x15"
1-ELM9920-100346	**Watkins/Caldera**, **Nordic**, Gecko M-Class Replaces **1-THP2400-0601-2**, C2400-0601, WATKINS C2400-C3330-1A, WATKINS C2400-C2695-1, 20-00294	4.0 kW 240V incl. p/sw & htr wires	2.0"x15"

*** Limited QTY Available.**

26-0071-K

26-1008-6S-K/ 7S-K

ELM9920-100347/ 346

1100-0115

2550-0071

2550-0119

2400-0310

2550-0316

©2018

HEATER MANIFOLD ASSEMBLIES

HEATER MANIFOLDS - LOW-FLOW - OEM Replacements

Part No.	APPLICATION	Description	Dimension
1-LAc3238-1A*	**Aber-Pacific** Replaces C3238-1A, 06HTR3220, SHH-5500-NHCW6938	5.5kW 240V 32" cord	20"x16"x14"
1-LAc3242-1A*	**Aber-Pacific**, **Artesian**, **Dynasty**, Gecko M-Class Replaces C3242-1A, 06HTR3210, C3549-1, SHH-5500-NH-6727	5.5 kW 240V Dual-element, 4-wire	21"x14.5"
1-LAc3556-2*	**Aber-Pacific** Replaces C3556-2, 06HTR3200, PEH-5526-NH-6742, PEH-5526-NH-6340, PEH-5556-NHW-6388	5.5kW 240V Dual-element Attaches to Laing pump	26"x6"
1-HQ26-3473-1-5T-K	**Caldera** Replaces **1-LAc3473-1**, C3473-1, 6595.1, SEH-4300-NHW-6595	4.0kW 240V 3-wire pigtail	26"x6"
1-LAc3550-1*	**D-1**, **Artesian**, Gecko M-Class Replaces C3550-1, SHH-5500-NH6871, SSH-5200-NH-6785, NHH-5500-NH-7328, SHH-5500-NH-6771	5.5kW 240V Dual-element, 4-wire w/TCO & plate	21"x14.5"
1-LAc3556-1*	**D-1** Replaces C3556-1, PEH-4326-NHW-6000, PEH-5526-NHW-6388	5.5kW 240V Dual-element, w/plug Attaches to Laing pump	26"x6"
1-BAL58375	**Jacuzzi/Sundance** Replaces **1-LAc3226-1A**, C3226-1A, 6500-063	4.0kW 240V Dual-element, 26" cord	26"x6"
1-BAL58371	**Jacuzzi/Sundance** Replaces **1-LAc3229-2A**, C3229-2A, J300 htr 6500-402 & 6500-403, SEH-5500-NH-6698, SEH-5500-NH-6699, 6698.1	5.5kW 240V 3-wire pigtail	23"x10"x15"

*** Limited QTY Available.**

Pressure/Vacuum/Flow Switches - p. 36

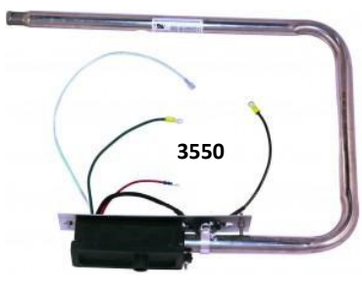

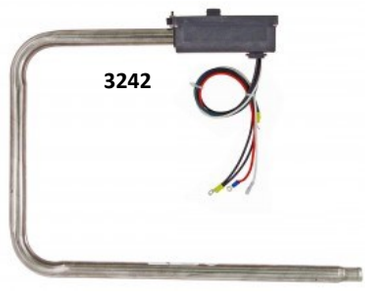

©2018

IMPORTANT NOTE Therm Products is no longer in business. Some of the heater products they manufactured are now being made by other companies. Items marked by an asterisk (*) are currently not in production. Availability is limited to stock on hand. Contact ELM for assistance.

HEATER MANIFOLD ASSEMBLIES

HEATER MANIFOLDS - LOW-FLOW - OEM Replacements

Part No.	APPLICATION	Description	Dimension
1-LAc3236-1A*	**LA Spas, Artesian, Atera, HydroQuip** Replaces SEH-5500-NHW-6698-6676, SEH-5500-NHW-7007, PEH-5526-NHW-6938, SEH-4100-NHCW-7130, SHH-5500-NH-6739, SEH-5500-NHW-6692/7154, SEH-5500-NHW-6652, SEH-5500-NHCW-6632, SHH-4100-NH-6739, SEH-5500-NHW-6659, 7007.1	4.0kW 240V 26” cord side p-sw tap is plugged	26”x14”
1-HQ26-C3160-1S-A	**Watkins, Tiger River** Replaces **1-LAc3564-1**, C3564-1, 6759, 7211, IHH-4000-NHCW-6759, IHH-4000-NHCW-7211.0, 9330-51, 9330-52, 733886721102, C2550-3661-TI , C2550-3661-TI2	6.0kW 240V w/AUTO reset hi-limit	20”x4”
1-HQ26-C3160-2S-A	**Watkins, Tiger River** Replaces **1-LAc3564-2**, C3564-2, IHH-4000-NHCW-6758, C2400-3661-TI , C2400-3661-TI2	4.0kW 240V w/AUTO reset hi-limit	20”x4”
1-THP2550-3661TI2*	**Watkins, Tiger River** - IQ2000 spa paks only Replaces C3564-1, C2550-3661-TI2	5.5kW 240V includes sensors	15”x2.25”
1-THP2400-3661TI2*	**Watkins, Tiger River** - IQ2000 spa paks only Replaces C3564-2, C2400-3661-TI2	4.0kW 240V includes sensors	15”x2.25”

*** Limited QTY Available.**

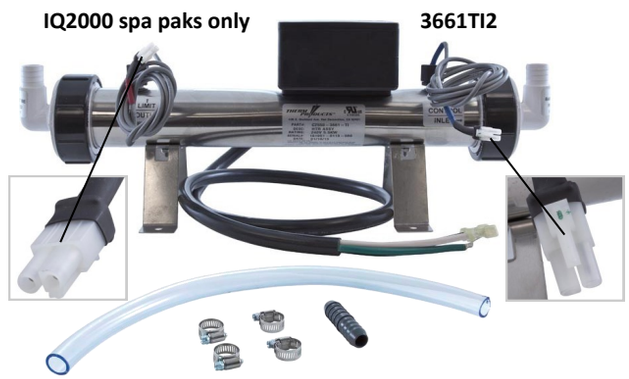

TECH NOTE A piece of 3/4" tubing, 4 clamps, and a 3/4" barbed coupling are included to facilitate retro-fit. Length of tubing required will vary by model of tub. It will also be necessary to plug the positive drain line that attached to the OEM heater.

©2018

Heater Buttresses - p. 54 & 99

HEATER MANIFOLD ASSEMBLIES

HEATER MANIFOLDS - LOW-FLOW - VERTICAL

Part No.	OEM	Description	Dimension
1-THP2550-0101*	**Caldera** Replaces E2550-0101, E2550-0101ET, 12351	5.5kW 240V no p-sw tap	3.0"x11"
1-THP26-00105*	**Discovery Spas** EP element, manifold has electrical box mount	5.5kW 240V 1.0"b inlet/outlet	3.0"x6-5/8"
1-THP2550-0202*	**Gatsby, Hurricane, Leisure Bay** Replaces E2550-0202ET, E2550-0202-1, E2550-0202, E2550-0202ET-1, E2550-0204, E2550-0204ET, E2550-0102ET, 26-00141, 9141-2, 23209	5.5kW 240V	3.0"x9.0"
1-THP26-00257*	**Maax Savannah** Replaces 26-00257, 26-00254, 26-00255, 24371	4.0kW 240V	3.0"x10"
1-THP26-00259*	**Maax/Coleman Infinity** 'Accutemp' Replaces 26-00259	4.0kW 240V	3.0"x12"
1-THP26-08145*	**Maax, Dynasty** Replaces 26-08145, 11571	4.0kW 240V w/p-sw	3.0"x6.5" (12"overall w/box)

*** Limited QTY Available.**

Pressure/Vacuum/Flow Switches - p. 36

26-00257

26-00105

26-00259

2550-0101

26-08145

2550-0202

Heater Manifold Parts - p. 54

©2018

IMPORTANT NOTE Therm Products is no longer in business. Some of the heater products they manufactured are now being made by other companies. Items marked by an asterisk (*) are currently not in production. Availability is limited to stock on hand. Contact ELM for assistance.

HEATER MANIFOLD ASSEMBLIES

HEATER MANIFOLDS - LOW-FLOW - VERTICAL

Part No.	OEM	Description	Dimension
1-THP2400-0027*	**Pinnacle** Replaces E2400-0027, E2400-0027ET	4.0kW 240V	3.0”x10”
1-THP2400-3037*	**Saratoga** Replaces C2400-C3037-2	4.0kW 240v	2.25”x13.5”
1-THP6500-301*	**Sundance** Replaces SD6500-301, HTR6500301, C2783-1, E2550-1000, 9143E, 2-00-0066, 23767	5.5kW 240V	3.5”x13”
1-THP6560-012*	Insulation for 1-THP6500-301 Replaces SD6560-012, 23766	Insulating wrap	———
1-THP2550-3314*	**Sundance** Replaces E2550-3314, 6500-310 (‘Smart’ htr), C3314-1	5.5kW 240V w/thermodisc	3.0”x13”
1-HQ26-3314-1-7T-K	**Sundance** OEM style ‘Smart’ htr Replaces **1-SD6500-310**, E2550-3314, C3314-1	5.5kW 240V	4.5” x 15”
1-THP2400-0127*	**Vita Spa, DM Industries** Replaces E2400-0127ET, E2400-1127ET, E2400-0126ET, E2400 -0026, E2400-1127, E2450-0127ET, E2450-1127ET, 411-087, 25148	4.0kW 240V two p-sw taps	3.0”x11”

*** Limited QTY Available.**

Pressure/Vacuum/Flow Switches - p. 36

Heater Buttresses - p. 54 & 99

©2018

HEATER MANIFOLD PARTS

SPLIT NUT - HEATER

Part No.	Description
4-60-WW400-5491	1.5" Heater Split Nut
4-60-WW400-5421	2.0" Heater Split Nut
4-60-MA0121108025	2.5" Heater Split Nut

Heater **Element Hardware** - p. 55

TECH - HOW TO SELECT THE CORRECT SIZE NUT

With the two halves of the split nut assembled, measure ID (Internal Dimension) of the inner flange on the threaded side:

ID 2-7/16" = 1-1/2" nut
ID 3-1/16" = 2" nut
ID 3-11/16" = 2-1/2" nut

BUTTRESSES / ADAPTERS

More **Buttresses & Adapters** - p. 99

Part No.	Description
4-60-WW417-2090	2.0 buttress x 1.5 s
4-60-WW417-5050	2.0 buttress x 2.0 s
4-60-WW417-5070	2.0 buttress x 2.0 spg(1.5s)
4-60-WW417-5060	2.0 buttress thread x 2.0 spg
4-60-WW417-6010	2.5 buttress x 2.5 s
4-60-WW417-5980	2.5 buttress x 2.5 s
4-60-WW417-5140	2.0 buttress x 2.0 mpt
4-60-WW417-5180	2.0 buttress x 1.0spg(3/4s)
1-HQ42-2392-K	3.0 buttress x 90° 1.0 s
1-HQ42-2373-K	3.0 buttress x 2.0 s
1-HQ42-2386-K	3.0 buttress x 90° 1.0 b
1-HQ42-2390-K	3.0 buttress x 90° 3/4 b
1-THP86-02391*	2-1/4 buttress x 90° 3/4 b

*** Limited QTY Available.**

HEATER O-RINGS, GASKETS, O-RING/GASKETS

Part No.	Description
4-60-WW805-0224	1.5 o-ring heater
4-60-WW805-0229	2.0 o-ring heater
4-60-WW805-0232-R	2.5 o-ring heater
4-60-WW711-4000	1.5 gasket heater
4-60-WW711-4010	2.0 gasket heater/union
4-60-WW711-4020	2.0 gasket - 1/4" thick
4-60-WW711-3250	2.5 gasket
4-60-WW711-4050	1.5 o-ring/gasket heater
4-60-WW711-4030	2.0 o-ring/gasket heater
4-60-WW711-6020	2.5 o-ring/gasket heater
4-60-THP44-02340	3.0 o-ring/gasket heater

LUBRICANTS

Seal Install Lube - p. 110

Part No.	Description
4-65-LT00150	Silicone w/PTFE (Teflon) 1oz
4-65-AL630	Magic Lube, PTFE, 1 oz
4-65-AL631	Magic Lube, PTFE, 5 oz
4-65-AL650	Magic Lube II, silicone, 1 oz
4-65-AL651	Magic Lube II, silicone, 5 oz
4-65-PenR172036	Silicone Lube, 3/4oz

©2018

IMPORTANT NOTE Therm Products is no longer in business. Some of the heater products they manufactured are now being made by other companies. Items marked by an asterisk (*) are currently not in production. Availability is limited to stock on hand. Contact ELM for assistance.

HEATER ELEMENTS & HARDWARE

HEATER ELEMENTS - Bowtie (Includes Hardware)

Item	Part No.	Volts / Watts	Length	Description
1	4-10-0704*	120 / 937	8-1/4 in	Bath style , Universal, centered terminals
2	4-10-0707BSCH	240 / 4000	10 in.	Universal, center terminals, low profile
	4-10-0707BSCH-TFL	240 / 4000	10 in.	Universal, center terminals, TEFLON
	4-10-0707BSCH-TTM	240 / 4000	10 in.	Universal, center terminals, TITANIUM
	4-10-0810BSCH	240 / 5500	10 in.	Universal, center terminals
	4-10-0810BSCH-TFL	240 / 5500	10 in.	Universal, center terminals, TEFLON
	4-10-0810BSCH-TTM	240 / 5500	10 in.	Universal, center terminals, TITANIUM
3	4-10-0707BBSC	240 / 4000	10 in.	Universal, off-set terminals
	4-10-0707BBSC-TFL	240 / 4000	10 in.	Universal, off-set terminals, TEFLON
	4-10-0707BBSC-TTM	240 / 4000	10 in.	Universal, off-set terminals, TITANIUM
	4-10-0810BBSC	240 / 5500	10 in.	Universal, off-set terminals
	4-10-0810BBSC-TFL	240 / 5500	10 in.	Universal, off-set terminals, TEFLON
	4-10-0810BBSC-TTM	240 / 5500	10 in.	Universal, off-set terminals, TITANIUM

*** Limited QTY Available.**

HEATER ELEMENTS - Coil (Includes Hardware)

Item	Part No.	Volts / Watts	Description
1	1-THP70-20056*	240 / 5500	2.0” dia. x 4.0” L
	1-THP70-20041*	240 / 4000	2.0” dia. x 4.0” L
2	1-THP70-20056-TE*	240 / 5500	2.0” dia. x 4.0” L - Tefel coating
3	1-THP70-20041-TE*	240 / 4000	2.0” dia. x 4.0” L - Tefel coating
4	1-THP25-5010L*	240 / 5500	5.5” ctr on terminals - Universal
	1-THP25-5011L*	240 / 4000	5.5” ctr on terminals - Universal

*** Limited QTY Available.**

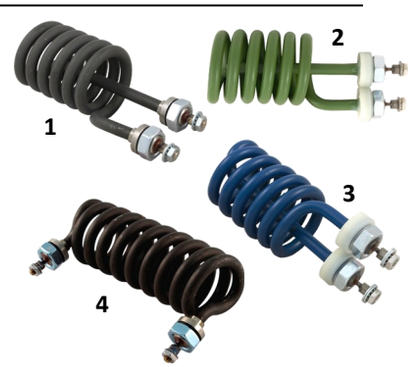

HEATER ELEMENT HARDWARE & WIRES

Part No.	Description
4-20-0251A	Kit: Element hardware w/Viton o-rings
4-10-0702A	Viton O-Ring; each
1-GEC9920-401160	Heater wire, Gecko S-Class, 1.5”; each
1-GEC9920-401161	Heater wire, Gecko M-Class, 3.0”; each
1-BAL30511	Heater strap with bolts, Balboa Value & LE; *pair*
1-BAL30192	Heater strap with bolts, Balboa; *pair*
1-BAL30015*	Heater strap, Balboa, ‘short’ strap; *each*
1-BAL30039	Heater strap, Balboa EL, VS, GL, GS; *each*

* used on some EL systems (early metal box) & new Value PC boards

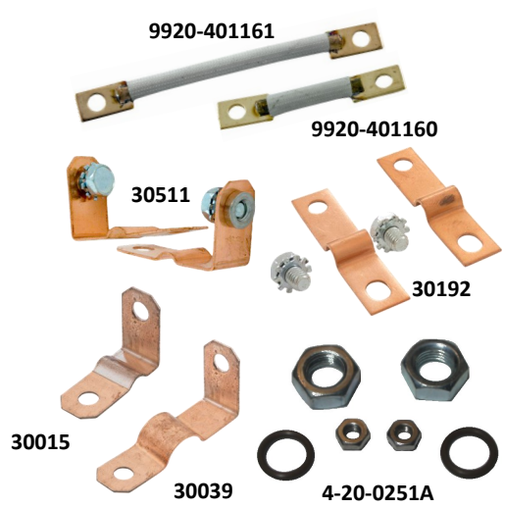

©2018

AVIS IMPORTANT Therm Product n'est plus en affaire. Certains chauffe-eaux qu'ils ont fabriqués sont maintenant faits par d'autres compagnies. Les items marqués par un astérisque (*) ne sont pas couramment en production. La disponibilité est limitée à la quantité en main. Contactez ELM pour une assistance.

HEATER ELEMENTS & HARDWARE

HEATER ELEMENTS - HAIRPIN

Part No.	Volts / Watts	Length	Fits OEM
1-THP25-0492*	240 / 4000	13 in.	C&R + others; 1/2" thread bulkhead
1-THP25-0461-1	240 / 5500	13 in.	C&R + others; 1/2" thread bulkhead

*** Discontinued**

HEATER ELEMENTS - NPT

Pressure/Vacuum/Flow Switches - p. 36

Part No.	Volts / Watts	Length	Fits OEM
1.0 in.			
4-10-0714*	120 / 1500	6-1/2 in.	Wicor, Aqua Spa Pac; 2x 5/16" t-well
4-10-0715*	240 / 4000	11.0 in.	Aqua Spa Pac + +; 2x 5/16" t-well
4-10-0722	240 / 5500	8.0 in.	Hayward, Coates, Comfortzone; no t-wells
4-10-0725	120 / 1500	11.0 in.	Hayward, Comfortzone + +; no t-wells
4-10-0723	240 / 5500	15-1/4 in.	CalSpa, Ramco, Coates, Hayward + +; no t-wells
4-10-0724*	240 / 5500	11.0 in.	Generic; 2x 5/16" t-well

*** Limited QTY Available.**

4-10-0725

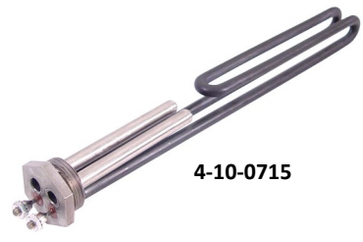

4-10-0715

TECH NOTE

NPT National Pipe Thread
MPT Male (National) Pipe Thread
MPT = NPT = *Tapered* Thread

NPSM National Standard Free-Fitting Straight Mechanical Pipe Thread
NPSM = *Straight* Thread

4-10-0724

4-10-0720

4-10-0722

4-10-0723

4-10-0714

TECH NOTE You can replace any 1.25" or 1.5" NPT element with equivalent wattage/size 1.0" NPT element using ELM PN# 4-60-1342 bushing (1.25"mpt x 1.0"fpt) or 4-60-1344 bushing (1.5"mpt x 1.0"fpt) - see p.61

©2018

Vous ne trouvez pas ce dont vous cherchez?
Contactez nous...et nous ferons notre mieux de le trouver pour vous!

PVC FITTINGS SCH40 WHITE

Glue & Primer - p. 67

ELL 90° (s x s)

Part No.	Description
4-60-0428	1/2 x 1/2
4-60-0433	3/4 x 3/4
4-60-0426	1.0 x 1.0
4-60-0427	1.5 x 1.5
4-60-0430	2.0 x 2.0
4-60-0431	2.5 x 2.5
4-60-0432	3.0 x 3.0
4-60-0429	2.0 x 1.5

ELL 90° (spg x spg)

Part No.	Description
4-60-WW411-5550	1.5 x 1.5
4-60-WW411-2100	2.0 x 2.0

ELL 90° (fpt x s)

Part No.	Description
4-60-0455	3/4 X 3/4
4-60-0425	1.5 x 1.5

ELL 90° (fpt x fpt)

Part No.	Description
4-60-0409	1.5 x 1.5

ELL 90° STREET (mpt x s)

Part No.	Description
4-60-0413	1.5 x 1.5
4-60-0414	2.0 x 2.0

ELL 90° STREET (mpt x fpt)

Part No.	Description
4-60-0411	1/2 x 1/2
4-60-0412	3/4 x 3/4
4-60-0410	1.5 x 1.5

ELL 90° (spg x s)

Part No.	Description
4-60-0417	1/2 x 1/2
4-60-0419	3/4 x 3/4
4-60-0415	1.0 x 1.0
4-60-0416	1.5 x 1.5
4-60-0418	2.0 x 2.0
4-60-0438	2.5 X 2.5

ELL 90° SWEEP (s x spg)

Part No.	Description
4-60-WW411-9100	1.5 x 1.5
4-60-WW411-9120	2.0 x 2.0
4-60-WW411-9140	2.5 x 2.5

ELL 90° SWEEP (s x s)

Part No.	Description
4-60-WW411-9110	1.5 x 1.5
4-60-WW411-9130	2.0 x 2.0
4-60-WW411-9150	2.5 x 2.5

ELL 90° (s x spg x s)

Part No.	Description
4-60-WW411-4080	1.5x1.5x1/2

ELL 90° (s x spg with fpt)

Part No.	Description
4-60-WW411-5040	2.0x2.0x1/2
4-60-WW411-5060	1.5x1.5x1/8

©2018

PVC **Repair Fittings** - p. 63

PVC FITTINGS SCH40 WHITE

ELL 45° (s x s)

Part No.	Description
4-60-0404	1/2 x 1/2
4-60-0408	3/4 x 3/4
4-60-0401	1.0 x 1.0
4-60-0403	1.5 x 1.5
4-60-0405	2.0 x 2.0
4-60-0406	2.5 x 2.5
4-60-0407	3.0 x 3.0

ELL 45° STREET (s x spg)

Part No.	Description
4-60-WW411-2020	1.0 x 1.0
4-60-WW411-4040	1.5 x 1.5
4-60-WW411-5030	2.0 x 2.0
4-60-0400*	2.5 x 2.5

*** Special Order**

WYE 45° (s x s x s)

Part No.	Description
4-60-WW413-4130	1.5x1.0x1.0
4-60-WW413-5040	2.0x1.5x1.5
4-60-WW413-5080	2.0x2.0x2.0

WYE 22.5° (s x s x s)

Part No.	Description
4-60-WW413-1820	3/4x3/4x3/4
4-60-WW413-2020	1.0x1.0x1.0
4-60-WW413-4140	1.0x1.0x1.5

WYE - MANIFOLD STYLE (s x s x s)

Part No.	Description
4-60-WW672-8000	2.0 x 2.0 x 2.0
4-60-WW672-8010	3/4 x 1/2 x 1/2
4-60-WW672-8020	1.0 x 3/4 x 3/4

U-BEND (s x s)

Part No.	Description
4-60-WW429-4030	2.0 x 2.0

©2018

ELM Engineering Logistics Marketing®

Vous ne trouvez pas ce dont vous cherchez?
Contactez nous...et nous ferons notre mieux de le trouver pour vous!

PVC FITTINGS SCH40 WHITE

Hose, Pipe & Tubing - p. 66

COUPLING (s x s)

Part No.	Description
4-60-0450	1/2 x 1/2
4-60-0454	3/4 x 3/4
4-60-0447	1.0 x 1.0
4-60-0448	1.25 x 1.25
4-60-0449	1.5 x 1.5
4-60-0451	2.0 x 2.0
4-60-0452	2.5 x 2.5
4-60-0453	3.0 x 3.0

COUPLING REDUCER (s x s)

Part No.	Description
4-60-0444	3/4 x 1/2
4-60-0443	1.0 x 1.5
4-60-0445	2.0 x 1.5

THREADED NIPPLE (mpt x spg)

Part No.	Description
4-60-WW423-4000	1.5 x 1.5

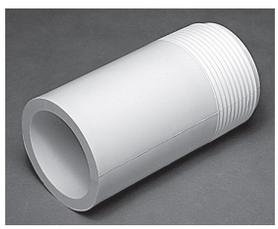

Discontinued. Limited QTY Available.

ADAPTER MALE (mpt x s)

Part No.	Description
4-60-1210	1/2 x 1/2
4-60-1213	3/4 x 3/4
4-60-1208	1.0 x 1.0
4-60-1209	1.5 x 1.5
4-60-1211	2.0 x 2.0
4-60-1212	3.0 x 3.0

ADAPTER MALE REDUCING (mpt x s)

Part No.	Description
4-60-1215	1.25 x 1.5
4-60-1216	1.5 x 2.0
4-60-1217	2.0 x 1.5

ADAPTER FEMALE (fpt x s)

Part No.	Description
4-60-1204	1/2 x 1/2
4-60-1207	3/4 x 3/4
4-60-1201	1.0 x 1.0
4-60-1202	1.25 x 1.25
4-60-1203	1.5 x 1.5
4-60-1205	2.0 x 2.0
4-60-1206	3.0 x 3.0

©2018

Glue & Primer - p. 67

PVC FITTINGS SCH40 WHITE

TEE (s x s x s)

Part No.	Description
4-60-0721	1/2"
4-60-0724	3/4"
4-60-0719	1.0"
4-60-0720	1.5"
4-60-0722	2.0"
4-60-0730	2.5"
4-60-0723	3.0"

TEE REDUCING (s x s x s)

Part No.	Description
4-60-0703	1 x 1 x 1/2
4-60-0702	1 x 1 x 1.5
4-60-0705	1.5 x 1.5 x 1/2
4-60-0707	1.5 x 1.5 x 3/4
4-60-0704	1.5 x 1.5 x 1
4-60-0725	2.0 x 2.0 x 3/4
4-60-0726	2.0 x 2.0 x 1
4-60-0708	2.0 x 2.0 x 1.5
4-60-0709	2.5 x 2.5 x 1.5
4-60-0710	2.5 x 2.5 x 2.0

TEE (s x s x fpt)

Part No.	Description
4-60-0727	3/4 x 3/4 x 1/2
4-60-0728	1.0 x 1.0 x 1/2
4-60-0729	1.0 x 1.0 x 3/4
4-60-0711	1.25 x 1.25 x 1.25
4-60-0713	1.5 x 1.5 x 1.5
4-60-0714	1.5 x 1.5 x 1/2
4-60-0715	1.5 x 1.5 x 3/4
4-60-0712	1.5 x 1.5 x 1.0
4-60-0717	2.0 x 2.0 x 1/2
4-60-0718	2.0 x 2.0 x 3/4
4-60-0716	2.0 x 2.0 x 1.5

TEE (s x s x spg)

Part No.	Description
4-60-WW413-2000	1 x 1 x 1.5
4-60-WW413-4000	1.5x1.5x1.5

Tee (fpt x fpt x fpt)

Part No.	Description
4-60-0701	1.5 x 1.5 x 1.5

TEE with AIR RELIEF (s x spg x fpt)

Part No.	Description
4-60-WW400-4260	2.0x2.0x3/8

CROSS (s x s x s x s)

Part No.	Description
4-60-0744	0.5x0.5x0.5x0.5
4-60-0745	1.5x1.5x1.5x1.5
4-60-0746	2.0x2.0x2.0x2.0

©2018

PVC FITTINGS SCH40 WHITE

RACCORD PVC BLANC SCH40

PVC FITTINGS SCH40 WHITE

Manifolds Water & Air - p. 64-65

BUSHING REDUCER (spg x s)

Part No.	Description
4-60-1326	3/4 x 1/2
4-60-1310	1.0 x 1/2
4-60-1311	1.0 x 3/4
4-60-1313	1.25 x 1/2
4-60-1314	1.25 x 3/4
4-60-1312	1.25 x 1.0
4-60-1317	1.5 x 1/2
4-60-1318	1.5 x 3/4
4-60-1315	1.5 x 1.0
4-60-1316	1.5 x 1.25
4-60-1321	2.0 x 1/2
4-60-1322	2.0 x 3/4
4-60-1319	2.0 x 1.0
4-60-1320	2.0 x 1.5
4-60-1350	2.5 x 1.5
4-60-1323	2.5 x 2.0
4-60-1324	3.0 x 2.0
4-60-1325	3.0 x 2.5

BUSHING THREADED (mpt x fpt)

Part No.	Description
4-60-1347	1/2 x 3/8
4-60-1352	1.0 x 1/2
4-60-1342	1.25 x 1.0
4-60-1345	1.5 x 1/2
4-60-1346	1.5 x 3/4
4-60-1344	1.5 x 1.0
4-60-1343	1.5 x 1.25
4-60-1348	2.0 x 1.5

CAP (slip)

Part No.	Description
4-60-1364	3/4
4-60-1367	1.0
4-60-1368	1.5
4-60-1369	2.0
4-60-1370	2.5
4-60-1371	3.0

CAP (fpt)

Part No.	Description
4-60-1365	1.0
4-60-1366	1.5
4-60-1372	2.0

BUSHING REDUCER (spg x fpt)

Part No.	Description
4-60-1333	1/2 x 1/4
4-60-1334	1/2 x 3/8
4-60-1308	3/4 x 1/2
4-60-1327	1.0 x 1/2
4-60-1328	1.0 x 3/4
4-60-1331	1.5 x 1/2
4-60-1332	1.5 x 3/4
4-60-1329	1.5 x 1.0
4-60-1330	1.5 x 1.25
4-60-1338	2.0 x 1/2
4-60-1339	2.0 x 3/4
4-60-1335	2.0 x 1.0
4-60-1336	2.0 x 1.25
4-60-1337	2.0 x 1.5
4-60-1309	2.0 x 2.0
4-60-1341	2.5 x 2.0

PLUG (spg)

Part No.	Description
4-60-1516	1/2
4-60-1519	3/4
4-60-1514	1.0
4-60-1515	1.5
4-60-1517	2.0
4-60-1518	3.0

PLUG (mpt)

Part No.	Description
4-60-1512	1/2
4-60-1513	3/4
4-60-1510	1.0
4-60-1511	1.5
4-60-1520	2.0

PLUG (manifold)

Part No.	Description
4-60-WW715-9860	3/4 spg - old style
4-60-WW715-0040	3/4 spg - new style
4-60-WW715-9870	3/8 spg

715-9860

715-0040

715-9870

©2018

Glue & Primer - p. 67

BARB ADAPTER FITTINGS

BARB ADAPTERS

Item	Part No.	Description
1	4-60-WW413-1201	3/8b x 1/4NPSM adapter
1a	4-60-WW672-4350	3/8b x 1/4MPT adapter
2	4-60-WW413-1900	3/8sb x 3/8sb x 3/8sb tee
2a	4-60-WW413-1800	3/4sb x 3/4sb x 3/4sb tee
3	4-60-413-1800A	3/4rb x 3/4rb x 3/4rb rib tee
4	4-60-WW413-4360	1.5spg x 3/4sb adapter
5	4-60-WW419-0900	3/4sb x 3/4sb smooth coupler
5a	4-60-419-0900A	3/4rb x 3/4rb ribbed coupler
6	4-60-WW419-1000	3/8b x 3/8b coupler
7	4-60-WW425-0210	1/2spg x 3/8b adapter
8	4-60-WW425-1000	1/2spg x 3/4b adapter
9	4-60-WW425-1030	1/2s(3/4spg) x 3/4b adapter
10	4-60-WW425-5010	1.0spg x 3/8sb adapter
11	4-60-WW672-4310	1.0spg x 3/4b adapter
12	4-60-WW672-4320	1.0s(1.25spg) x 3/4b adapter
13	4-60-WW672-4070	(4) 3/8b 'double tee'
14	4-60-WW425-4020	1/4b x 3/8b coupler
15	4-60-WW672-4010	1.0spg x (2)3/8b
16	4-60-WW672-4030	1.0spg x (4)3/8b
17	4-60-WW413-4350	1.0s x 1.0s x 3/8b
18	4-60-WW425-4040	1.0s x 3/8b
19	4-60-1525	1/4MPT x 90° 1/4 barb
20	4-60-1526	1-1/2"b x 1-1/2mpt adapter
21	4-60-WW425-1010	1"spg(3/4"s) x 1"RB adapter

TECH NOTE

NPT National Pipe Thread
MPT Male (National) Pipe Thread
MPT = NPT = *Tapered* Thread

NPSM National Standard Free-Fitting Straight Mechanical Pipe Thread
NPSM = *Straight* Thread

1

1a

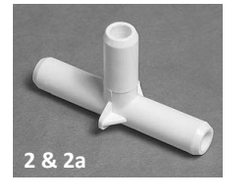
2 & 2a

3

4

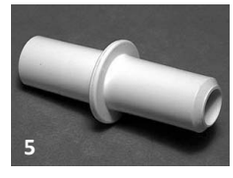
5

5a

6

7

8

9

10

11

12

13

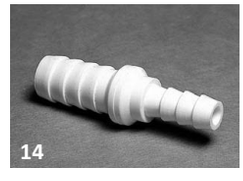
14

15

16

17

18

19

20

21

BARB ADAPTER FITTINGS

RACCORDS D'ADAPTATEUR BARBELÉ

©2018

ELM Engineering Logistics Marketing®

FITTINGS - REPAIR

Glue & Primer - p. 67

SNAP OVER SEAL

Part No.	Description
4-60-21184-750	3/4
4-60-21184-100	1.0
4-60-21184-150	1.5
4-60-21184-200	2.0
4-60-21184-250	2.5
4-60-21184-230	2.0s x 2.5spg

Seals leaks on PVC SCH40 fittings and pipe!
Simply apply glue to the area of the leak and to the inside of the repair fitting. Snap fitting over the plumbing!

PIPE EXTENDER

Part No.	Description
4-60-WW418-1000	1/2 x 1/2
4-60-WW418-2000	3/4 x 3/4
4-60-WW418-3000	1.0 x 1.0
4-60-WW418-5000	1.5 x 1.5
4-60-WW418-6000	2.0 x 2.0

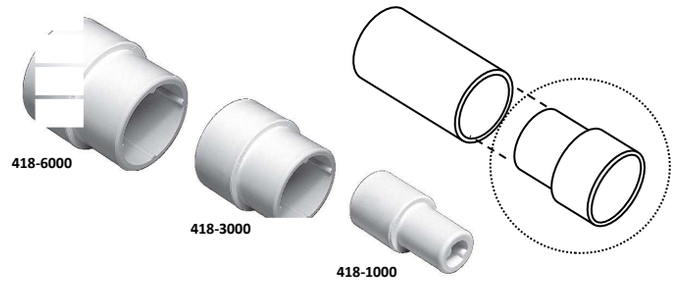

INSIDE PIPE COUPLER

Part No.	Description
4-60-WW419-4100	1.0 x 1.0
4-60-WW419-4110	1.5 x1.5
4-60-WW419-4120	2.0 x 2.0

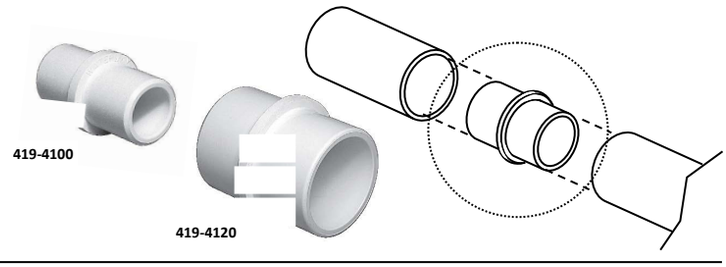

FITTING EXTENDER

Part No.	Description
4-60-WW429-2000	1.5 x 1.5
4-60-WW429-2010	2.0 x 2.0

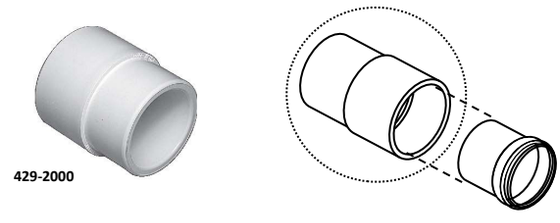

SPLIT NUT - UNION REPAIR

Part No.	Description
4-60-MA0121109015	1.5” Union Split Nut
4-60-MA0121109020	2.0” Union Split Nut
4-60-MA0121109025	2.5” Union Split Nut

Small Inner Flange
Fits Pump Union Tailpieces

SPLIT NUT - HEATER MANIFOLD

Part No.	Description
4-60-WW400-5491	1.5” Heater Split Nut
4-60-WW400-5421	2.0” Heater Split Nut
4-60-MA0121108025	2.5” Heater Split Nut

©2018

PVC FITTINGS - MANIFOLDS - WATER

MANIFOLDS

Part No.	Description
4-60-WW672-4550	2.0spg x 1.5s x (6) 1.0s
4-60-WW672-4450*	2.0spg x 1.5s/2.0spg x (9)3/4s

*** Discontinued. Limited QTY Available.**

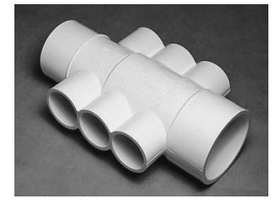

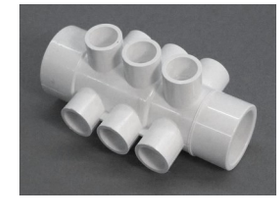

Part No.	Description
4-60-WW672-4580	1.5s x (4)1/2s
4-60-WW672-4670	1.5s x (4)3/4s
4-60-WW672-4620	1.5s x (4)1.0s
4-60-WW672-4390	2.0s x (5)1.0s
4-60-WW672-4130	2.0s x (6)1/2s
4-60-WW672-4260	2.0s x (6)3/4s

Part No.	Description
4-60-WW672-4180	1.5s x 1.5s x (4)3/4s
4-60-WW672-4630	1.5spg x 1.5s x (10)1/2s
4-60-WW672-4640	1.5spg x 1.5s x (8)3/4s

Part No.	Description
4-60-WW672-4210	2.0s x 2.0s x (4)3/4s
4-60-WW672-4200	2.0s x 2.0spg x (4)3/4s
4-60-WW672-4110	2.0s x 2.0s x (6)1/2s
4-60-WW672-4270	2.0s x 2.0s x (6)3/4s

Part No.	Description
4-60-WW672-4150	1.5s x 1.5spg x (4)3/4sb
4-60-WW672-4680	1.5s x 1.5spg x (10)3/4sb
4-60-WW672-4910	2.0s x 2.0spg x (2)3/4sb
4-60-WW672-4160	2.0s x 2.0spg x (4)3/4sb
4-60-WW672-4940	2.0s x 2.0spg x (6)3/4sb
4-60-WW672-4170	2.0s x 2.0s x (4)3/4sb
4-60-WW672-7930	2.0s x 2.0s x (6)3/4sb

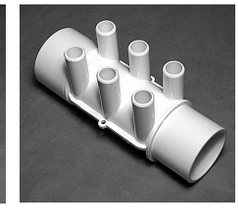

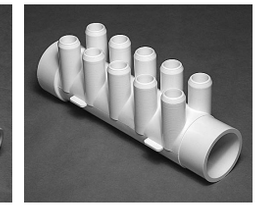

Part No.	Description
4-60-WW672-7120	2.0s x 2.0s x (6)3/4b
4-60-WW672-7150	2.0s x 2.0spg x (6)3/4b
4-60-WW672-7140	2.0s x 2.0spg x (4)3/4b
4-60-WW672-7130	2.0s x 2.0spg x (2)3/4b

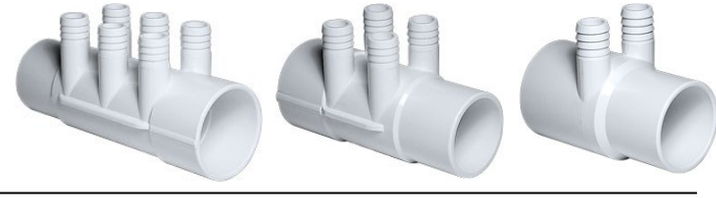

MANIFOLD PLUGS - 3/4"

Part No.	Description
4-60-WW715-9860	3/4 spg - old style
4-60-WW715-0040	3/4 spg - new style

715-9860

715-0040

©2018

ELM Engineering Logistics Marketing®

Vous ne trouvez pas ce dont vous cherchez?
Contactez nous...et nous ferons notre mieux de le trouver pour vous!

PVC FITTINGS - MANIFOLDS - AIR

Glue & Primer - p. 67

MANIFOLDS - AIR

MANIFOLDS

Part No.	Description
4-60-WW672-0410	1.0s x 1.0spg x (12)3/8b
4-60-WW672-4340	1.0s x 1.0spg x (8)3/8b
4-60-WW425-4000	1.5s x 1.5spg x (6)3/8b

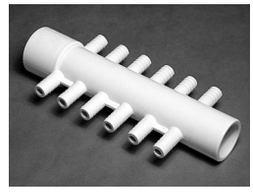
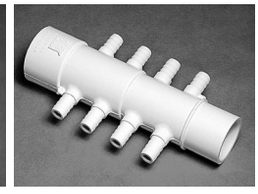
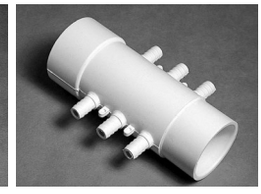

Part No.	Description
4-60-WW672-0420	1.5s x 1.5spg x (16)3/8b
4-60-WW672-4660	1.5s x 1.5spg x (10)3/8b

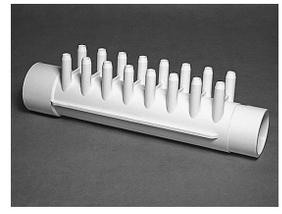

Part No.	Description
4-60-WW672-4370	1.0spg x (8)3/8b
4-60-WW672-4690	1/2s x 1/2s x (6)3/8b

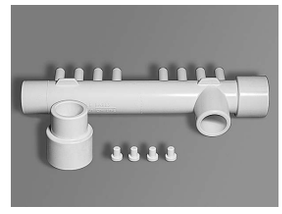
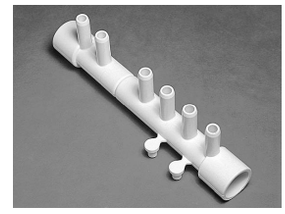

COLLECTEURS - AIR

Part No.	Description
4-60-WW425-5010	1.0spg x (1)3/8sb
4-60-WW672-4010	1.0spg x (2)3/8sb
4-60-WW672-4030	1.0spg x (4)3/8sb
4-60-WW672-4100	1.0spg x (5)3/8sb

Part No.	Description
4-60-WW672-5060	1.0s x 1.0s x (6)3/8b
4-60-WW672-5070	1.0s x 1.0s x (8)3/8b
4-60-WW672-5080	1.0s x 1.0s x (10)3/8b

Part No.	Description
4-60-WW413-4350	1.0s x 1.0s x 3/8b
4-60-WW425-4040	1.0s x 3/8b

MANIFOLD PLUG - 3/8”

Part No.	Description
4-60-WW715-9870	3/8 spg

715-9870

©2018

PVC Fittings/Adapters/Manifolds p. 57-65

HOSE, PIPE & TUBING

MINIMUM ORDER LENGTH = 5 FT.

FLEX HOSE

Part No.	Description	Roll/ft.
4-70-0010	1/2 in.	100
4-70-0011	3/4 in.	100
4-70-0012	1.0 in.	100
4-70-0013	1.5 in.	50
4-70-0014	2.0 in.	50
4-70-0015	2.5 in.	50
4-70-0016	3.0 in.	50

RIGID PIPE - SCH40

Part No.	Description	Length/ft.
4-70-0030	1/2 in.	10
4-70-0031	3/4 in.	10
4-70-0032	1.0 in.	10
4-70-0034	1.5 in.	10
4-70-0035	2.0 in.	10
4-70-0036	2.5 in.	10
4-70-0037	3.0 in.	10

NOTE: Rigid pipe shipped in maximum 5 ft. lengths
10 ft. lengths available for pick-up only

VINYL TUBING

Part No.	Description	Roll/ft.
4-70-0020	1/8 in. ID.	100
4-70-0021	1/4 in. ID	50
4-70-0022	3/8 in. ID	50
4-70-0023	3/4 in. ID	50

CLAMPS

Part No.	Description
4-70-HC6STZD	1/4 in. spring clamp, **25-pk**
4-70-DW6STZD	1/4 in. spring clamp, **25-pk**
4-70-24375	3/8 in. spring clamp, **10-pk**
4-70-DW17STR	3/4 in. spring clamp, **10-pk**
4-60-WW872-2160	3/4 in. cinch clamp, **each**
4-70-VP34134	SS gear clamps 3/4 - 1-3/4, **6-pk**
4-70-VP1916212	SS gear clamps 1-9/16 - 2-1/2, **6-pk**
4-70-VP134234	SS gear clamps 1-3/4 - 2-3/4, **6-pk**

©2018

GLUE/CEMENT, PRIMER, SEALANTS & ADHESIVES

GLUE/CEMENT, PRIMER

Part No.	Description	
4-70-IPS711G-PT	711 PVC Cement Grey, heavy body, rigid	pint
4-70-IPS725B-QP	725 PVC Cement Blue WET 'R DRY, flex	1/4 pint
4-70-IPS725B-PT	725 PVC Cement Blue WET 'R DRY, flex	pint
4-70-IPS725B-QT	725 PVC Cement Blue WET 'R DRY, flex	quart
4-70-IPS747B-QP	747 PVC Cement Blue POOL 'R SPA, flex	1/4 pint
4-70-IPS747B-PT	747 PVC Cement Blue POOL 'R SPA, flex	pint
4-70-IPS747B-QT	747 PVC Cement Blue POOL 'R SPA, flex	quart
4-70-IPS795C-QP	795 PVC FLEX Cement Clear, flex/rigid	1/4 pint
4-70-IPS795C-PT	795 PVC FLEX Cement Clear, flex/rigid	pint
4-70-IPS795C-QT	795 PVC FLEX Cement Clear, flex/rigid	quart
4-70-IPSP68C-QP	P-68 PVC Primer Clear,1/4 pint	1/4 pint
4-70-IPSP68C-PT	P-68 PVC Primer Clear, pint	pint
4-70-IPSP68C-QT	P-68 PVC Primer Clear, quart	quart

SEALANTS, ADHESIVES, EPOXIES

Part No.	Description	
4-70-AM82093	AquaMend UNDERWATER Repair Epoxy Putty	4 oz.
4-70-DEV14300	Plastic Welder, tube - strong load-bearing bond	25ml
4-70-DEV14240	5-Minute Epoxy Gel - excellent for filling gaps	25ml
4-70-DEV17150	High-quality RTV Silicone, clear	10.3 oz.
4-70-BOSS802	General Purpose Silicone Adhesive, clear	10.3 oz.
4-70-MAR-FAL8OZ	FIX A LEAK - Seals up to 1/8" Holes	8 oz.
4-70-MAR-FAL32OZ	FIX A LEAK - Seals up to 1/8" Holes	32 oz.
4-70-VP12520	TEFLON TAPE, 1/2" x 520"	43 ft

NO APPLICATION GUN REQUIRED!

TEFLON TAPE

©2018

OZONATORS

DEL OZONE CD OZONATORS

Part No.	Description
8-10-DEL-ECS1RPAM2-U	SpaEclipse; auto voltage, Amp
8-10-DEL-ECS1RPOZM-U	SpaEclipse; auto voltage, J&J mini

OZONATOR PARTS - DEL

4-60-20214	Check Valve 1/4"bx1/4"b, viton
8-10-DEL-71140	Check Valve 1/4"bx3/8"b, 0.5psi
8-10-DEL-9072201	Mazzei KIT - #984 green injector, with Liquid Gas Mixer & nozzle
8-10-DEL-9072204	Mazzei KIT - #784 blue injector, with Liquid Gas Mixer & nozzle
8-10-DEL-9079101	Ozone Test Kit - 10/package

AUTOMATICALLY DETECTS THE CORRECT VOLTAGE!

Advanced Plasma Gap Technology!

The Spa Eclipse II is a high output CD ozone generator for 750+ gallons of water. Impressive 50-70 mg/hr ozone output!

ULTRAVIOLET

DELTA UV

Part No.	Description
8-10-DUV-EA9U	120/240V EA-9 with 3/4"b adapters
8-10-DUV70-18309	UV replacement bulb, EA-9

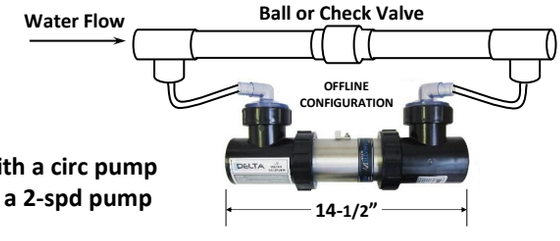

Install inline with a circ pump or offline with a 2-spd pump

Flow Requirement:
3 GPM / 11 LPM

BROMINE GENERATOR

GENESIS SALT WATER BROMINE SYSTEM

Part No.	Description
8-10-PHT-GEN100 *	120V/240V Genesis Bromine Generator
8-10-PHT-FRAME *	Mounting Frame, spa cabinet
8-10-PHT-ELECTRODE	Replacement Electrode

* Special Order

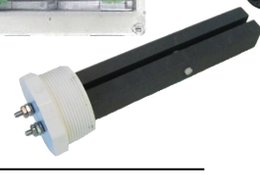

Sodium Bromide for Salt Water Bromine Systems p. 74

©2018

ELM Engineering Logistics Marketing®

Vous ne trouvez pas ce dont vous cherchez?
Contactez nous...et nous ferons notre mieux de le trouver pour vous!

TEST STRIPS

WATER TESTING

TEST STRIPS

Part No.	Description
8-10-WCTEST1	Watersafe® Bacteria Test Strip - single use
8-10-WCTEST10	Watersafe® Bacteria Test Strip - 10 pak
8-10-AC-522106	AquaChek Bromine 4-in-1 (replaces 521252A)
8-10-AC-532105	AquaChek Chlorine 4-in-1 (replaces 511242A)
8-10-AC-561682A	AquaChek MPS (non-chlorine shock) 3-in-1
8-10-AC-541604A	AquaChek Bromine/Chlorine 7-in-1 KIT
8-10-AC-511710	AquaChek PRO Bromine/Chlorine 5-in-1
8-10-AC-512084	AquaChek PRO II - Hardness, Acid, TDS
8-10-LM-2976-100	LaMotte Bromine 3-in-1
8-10-LM-2977-12-PT	LaMotte Chlorine 5-in-1
8-10-AC-561140A	Sodium Chloride - Salt System
8-10-AC-562053	Sodium Bromide (replaces NABRTS)
8-10-DEL-9079101	Ozone Test Kit - 10/package
8-10-AC-512082	AquaChek TRUTEST refill - 50 test strips
8-10-AC-552244	AquaChek Spa Cl/Br 6-in-1

BANDES À RÉACTIF

©2018

SPAZAZZ® FRAGRANCES

Spazazz aromatherapy fragrances are specially formulated for use in spas, hot tubs and bathtubs. These products won't leave behind an oily residue or effect your water in any adverse way.

INSTANT AROMATIC ESCAPE BEADS 1/2 oz.

Spazazz aromatherapy products are now available as Instant Aromatic Escape Beads. They are perfect for spa dispensers (air blowers), humidifiers, the car, and just about anywhere else you want Spazazz aromas!
Use them inside the house to enjoy the benefits or aromatherapy in any room. Add them to your humidifier and instantly enjoy the lasting benefits. Place them in your car and you have an instant air freshener that out lasts those cardboard air fresheners!

Part No.	Description
8-10-SPZ-350	Honey Mango "Arouse"
8-10-SPZ-351	Warm French Vanilla "Calm"
8-10-SPZ-352	Tropical Rain "Revitalize"
8-10-SPZ-353	Sweet Pea Apple "Rejuvenate"
8-10-SPZ-354	Pina Colada "Enliven"
8-10-SPZ-355	Florawood "Romantic"
8-10-SPZ-356	Ocean Mist "Tranquility"
8-10-SPZ-360	Strawberries & Champagne "Romantic"
8-10-SPZ-361	Sex On The Beach "Passion"
8-10-SPZ-362	Margarita "Happy Hour"
8-10-SPZ-363	Love Potion #9 " Seduction"
8-10-SPZ-364	Cosmo "Flirty"
8-10-SPZ-365	Mimosa "Celebrate"
8-10-SPZ-366	Sangria "Wild Fiesta"
8-10-SPZ-370	Muscle Therapy "Hot N' Icy"
8-10-SPZ-371	Joint Therapy "Inflammation"
8-10-SPZ-372	Respiratory Therapy " Relief"
8-10-SPZ-373	Detox Therapy "Detoxifying"
8-10-SPZ-374	Stress Therapy "De-Stress"
8-10-SPZ-375	Energy Therapy "Boost"
8-10-SPZ-376	Sport Therapy "Rebuild"

INSTANT AROMATIC ESCAPE BEADS

WATER THERAPY ELIXIRS 8.25 oz.

A fresh, fragrant blend of zesty botanicals and natural extracts fused with a special mixture of vitamins and minerals, Water Therapy Elixirs will bring a relaxing end to a long day, or a soothing experience to any indulgence.

Part No.	Description
8-10-SPZ-200	Be-ne-fit (Promotes well being)
8-10-SPZ-201	De-Sire (Aromatic Sensual)
8-10-SPZ-202	Pam-per (Excessive Care)
8-10-SPZ-203	Re-fresh (Restore & Stimulate)
8-10-SPZ-204	Pow-er (Physical & Mental Boost)
8-10-SPZ-205	Re-lax (Unwind & Alleviate Stress)

©2018

FRAGRANCES

FRAGRANCES SPAZAZZ®

ORIGINAL CRYSTALS 17 oz.

All natural blend of moisturizing botanicals and aloe vera, with enhanced fragrance longevity that will help alleviate stress and tension while leaving your skin feeling soft.

Part No.	Description
8-10-SPZ-100	Honey Mango "Arouse"
8-10-SPZ-101	Eucalyptus Mint "Stimulate"
8-10-SPZ-102	Warm French Vanilla "Calm"
8-10-SPZ-103	Tropical Rain "Revitalize"
8-10-SPZ-241	Ocean Mist "Tranquility"
8-10-SPZ-251	Coconut Vanilla "Exotic"

ORIGINAL BLEND
AROMATHERAPY CRYSTALS

PARFUMS

SET the MOOD CRYSTALS 17 oz.

Set the mood, arouse emotion and relax your state of mind. Packed with vitamins and minerals, an all natural blend of botanicals to help alleviate stress and tension while leaving your skin feeling soft.

Part No.	Description
8-10-SPZ-502	Strawberries N' Champagne "Romance"
8-10-SPZ-503	Sex On The Beach "Passion"
8-10-SPZ-505	Love Potion #9 "Seduction"
8-10-SPZ-509	Mimosa "Celebrate"
8-10-SPZ-511	Sangria "Wild Fiesta"
8-10-SPZ-512	Moonshine Whisky "Bottoms Up"

set the mood
AROMATHERAPY CRYSTALS

ESCAPE CRYSTALS 22 oz.

Captivate your senses with an affordable indulgence that will enhance your soaking experience. The moisturizing botanicals increase skin hydration and pamper your skin while the long lasting aroma soothes your senses.

Part No.	Description
8-10-SPZ-107	Lavender Palmarosa "Relax"
8-10-SPZ-108	Verbena Lime Coconut, "Awaken"
8-10-SPZ-109	Green Tea Peony "Enlighten"
8-10-SPZ-110	White Musk Vanilla Jasmine "Soothe"
8-10-SPZ-111	Grapefruit Orange "Invigorate"
8-10-SPZ-261	Pomegranate "Energize"

Escape
AROMATHERAPY CRYSTALS

©2018

SPAZAZZ® FRAGRANCES

DESTINATIONS CRYSTALS 22 oz.

Discover memorable blends of fragrances that invigorate the senses, transporting you to remote destinations, across different lands, sharing in everything that makes these exotic locations wonderful.

Part No.	Description
8-10-SPZ-301	Paris "City of Love"
8-10-SPZ-302	New York City "Big Apple"
8-10-SPZ-303	Hawaii "Aloha Paradise"

DESTINATIONS
AROMATHERAPY CRYSTALS

Rx THERAPY CRYSTALS 19 oz.

For soothing those aches and pains, while relaxing and soaking in vitamins. Reduces tension, relaxes your muscles.

Part No.	Description
8-10-SPZ-601	Muscle Therapy "Hot N' Icy"
8-10-SPZ-602	Joint Therapy "Inflammation"
8-10-SPZ-603	Respiratory Therapy "Relief"
8-10-SPZ-604	Detox Therapy "Detoxifying"
8-10-SPZ-605	Stress Therapy "De-Stress"
8-10-SPZ-606	Energy Therapy "Boost"
8-10-SPZ-607	Sport Therapy "Rebuild"
8-10-SPZ-608	Skinny Soak "Reduce & Firm"

Rx THERAPY AROMATHERAPY CRYSTALS

CRYSTALS SAMPLERS 4 oz.

No guarantee that you'll get any particular fragrance, but the staff will limit the assortment to no more than two of any given product. This is a GREAT way to stock a BIG variety for your customers at a BIG savings!

Part No.	Description
8-10-SPZ-169	Forty (40) Assorted 4oz. Fragrances

SAMPLE SIZE
AROMATHERAPY CRYSTALS

©2018

ELM ENGINEERING LOGISTICS MARKETING®

NATURAL WATER QUALITY CARE

the healthy, environmentally friendly way to **cleaner clearer high definition water!**

NATURAL WATER TREATMENTS - Hot Tub & Jetted Bath

Part No.	Description	CS. QTY
8-10-MRE16	Master Radiance Enzymes, 16oz.	12
8-10-AHHSOME2OZ	Plumbing Purge & Jet Cleaner, 2oz.	24
8-10-AHHSOME6OZH	Plumbing Purge & Jet Cleaner, 6oz.	12
8-10-AHHSOME16OZ	Plumbing Purge & Jet Cleaner, 16oz.	6
8-10-AHHSOME2OZF	Filter Cleaner, 2oz.	24
8-10-AHHSOME6OZP	Pool Water Clarifier, 6oz.	12
8-10-NAT2SPA	Nature2 Spa Clarifier, Mineral Cartridge	36

case quantities are provided for your convenience

The NATURAL way to treat your water!

Plumbing Purge, Jet Cleaner, 16oz. Commercial size

Plumbing Purge, Jet Cleaner, 2oz.

Plumbing Purge, Jet Cleaner, 6oz. Economy size

16 ounces lasts 16 weeks for hot tubs up to 500 gallons/1,900 litres

Filter Cleaner, 2oz.

Spa Water Clarifier, Mineral Cartridge

Pool Water Clarifier, 6oz.

le moyen sain et écologique afin d'avoir une eau en haute définition propre et claire!

©2018

Natural Water Treatments - p. 73

WATER QUALITY CARE

BROMINE/CHLORINE/WATER BALANCE

Part No.	Description	CS. QTY
8-10-909709	Shock, Non-Chlorine Oxidizer, 1kg , ea.	12
8-10-909367	Chlor-Aid, 800g (Dichlor), granulated	12
8-10-909600	Defoamer, 500 ml	12
8-10-909358	pH Reducer, 1kg; to reduce pH	12
8-10-909355	pH Booster, 750g; to increase pH	12
8-10-909356	Alka-rise, 750g; to increase alkalinity	12
8-10-909415	Bromine tablets, 700g	12
8-10-909416	Bromine tablets, 1.5kg	6
8-10-907630*	Lithium Hypochlorite, 600g, granulated	12
8-10-907632*	Lithium Hypochlorite, 2kg, granulated	6
8-10-907724	Chlorine tabs, Trichlor, 1.0in., 800g	12
8-10-907723	Chlorine tabs, Trichlor, 1.0in., 2.0kG	6
8-10-909500	Prevent II Stain & Scale inhibitor, 500ml	12
8-10-909351	Cal-Rise Calcium Increaser, 680g	12

* **No Longer Available**

BROMINE / SODIUM BROMIDE WATER TREATMENT

Part No.	Description
8-10-909304	Sodium Bromide (NaBr), Liquid, each available in case qty: 4 x 4L (1.1 gal.)
8-10-908424	Sodium Bromide (NaBr), Crystal, each available in case qty: 6 x 2kG (4.4lb.)
8-10-909709	Shock, Non-Chlorine / Oxidizer, each available in case qty: 12 x 1KG (2.2lb.)

These products are Compatible with ALL Salt Water Bromine Generators

NaBr Crystal

NaBr Liquid

©2018

DISPENSERS & THERMOMETERS

DISPENSERS / THERMOMETERS

Part No.	Description
8-10-MP8055	Dispenser, Generic
8-10-PenR171074	Dispenser, Rainbow 335 blue
8-10-PenR171090	Dispenser, Rainbow 335 tan
8-10-MP8120	Thermometer, floating

The Original Premium Rainbow 335 Floating Dispenser

Floating Dispensers For 1" Tablets

Generic Floating Dispenser

Built-in Bromine/Chlorine Dispensers - p.90 & 93

FILTER CARTRIDGE CLEANING TOOLS

FILTER CARTRIDGE CLEANING TOOLS

Part No.	Description
4-70-ACS	Aqua Comb - Spa
4-70-ACP	Aqua Comb - Pool

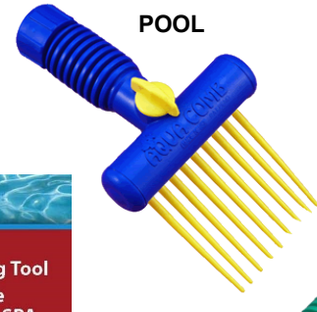

POOL

SPA

©2018

MAINTENANCE & CLEANING PRODUCTS

PIPE CLEANERS / FILTER CLEANERS / SURFACE CLEANERS / POLISHES

Part No.	Description
4-70-909910	Filter Cartridge Cleaner, 1L
4-70-SA-PC475	Swirl Away Pipe Cleaner, 475ml
4-70-909365	Spa Boss Pipe Cleaner, 500ml
4-70-PIUSPL24	Ultrashine Plus, 24oz spray
4-70-PIUSV24	Ultrashine Vinyl & Leather Cleaner, 24oz spray
4-70-PITBM1	Ultra Mitt, each
8-10-PITB124	Scumbug, oil absorbing sponge, each
8-10-PIUS12	Ultra Screen, skimmer basket pre-filter, 5-pack

PHOSPHATE

AHH-SOME...the ULTIMATE Plumbing Purge & Jet Cleaner! p. 73

Ultrashine Plus
Cleans, polishes, protects plastic. Can also be used on glass, chrome, marble, stainless-steel & porcelain

Ultrashine Vinyl & Leather
Cleans, conditions, protects vinyl & leather. Use on spa covers, shoes, boat & auto upholstery, furniture

For removing scum, slime & grime from walls of spas and pools; has a slightly abrasive open-hand surface bonded to a waterproof latex glove, providing a very large scrubbing surface; ideal for use on acrylic, fiberglass, vinyl and tile surfaces.

Absorbs 40x it's weight in body oils & lotions! Helps prevent the formation of scum lines.

An extremely fine mesh material bound to a durable elastic ring. Stretch it over the rim of the skimmer basket and it catches debris, scum and bugs to help prevent clogging of the filtering system.

p: 905.670.5387 f: 905.670.5389 t: 888.502.6960 info@elmsalesandequipment.com
©2018

SPA VACUUMS

SIPHON VACUUMS

Part No.	Description
	QUICKVAC
4-90-BICQV-1	Each
4-90-BICQV-6	Case of 6
	QUICKDRAIN
4-90-BICQD-1	Each
4-90-BICQD-6	Case of 6
4-90-BICQD-HK1	Extension hose kit 24ft

Even Removes Heavy Debris
Like Gravel and Broken Glass

Self-Priming
Vacuums while it drains

DISPLACEMENT VACUUMS

Part No.	Description
	PARADISE
4-90-PINPSV1	Spa Vac, ea.
4-90-PINPOP6	Spa Vac, 6-pk w/display
4-90-PINPOP12	Spa Vac, 12-pk w/display
	WATER TECH
4-90-WTGG101*	Grit Gitter in Display Jar, ea.
4-90-WTGG121*	Grit Gitter Stretch, ea.

No Pumping Required!

Paradise
Spa Vac

Grit Gitter

Aluminum
Telescopic
Pole

Grit Gitter
Stretch

POWER VACUUMS

Part No.	Description
	WATER TECH
4-90-WTVAC127*	Spa Vac, Pool Blaster, ea.
4-90-WTAQBRM*	Aqua Broom, ea.

Aqua Broom

Requires 5 D-Cell
Batteries (not incl.)

Pool Blaster
Spa Vac

Requires 3 C-Cell
Batteries (not incl.)

*** Discontinued. Limited QTY Available.**

©2018

HAND TOOLS - SERVICE

HAND TOOLS

Part No.	Description
4-70-PT111	Impeller Wedge
4-70-PT127	Impeller Wrench (for closed impeller)
4-70-PT128	Armature Holding tool, fits 1/2” socket
4-70-PT134	O-ring Pick
4-70-PT121	Mini Hacksaw
4-70-PT121R	Blades 10/pk; Mini Hacksaw
4-70-CS24L	Cable Saw
4-70-SS200	Hose Cutter, up to 2” PVC flex/tubing
4-70-SS200RB	Replacement blade, SS, hose cutter
4-70-AB-PULLER	Armature Bearing Puller
4-70-HRPC50	Pipe Cutter, Heavy Duty, up to 2” PVC rigid
4-70-HRPC50B	Replacement blade, SS, HD pipe cutter

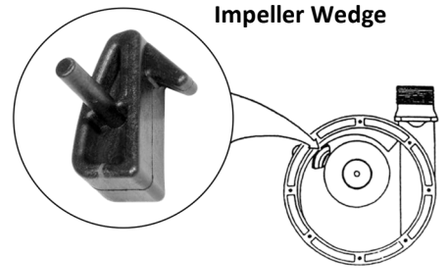
Impeller Wedge

O-ring Pick

Impeller Wrench

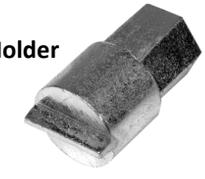
Armature Holder

Hose Cutter

Replacement Blade
Hose Cutter

Heavy Duty
Ratchet Pipe Cutter

Bearing Puller

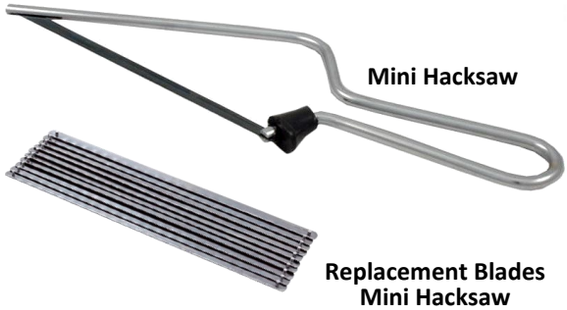
Mini Hacksaw

Replacement Blades
Mini Hacksaw

Cable Saw

©2018

JET TOOLS - SERVICE

JET TOOLS

Part No.	Description
	WATERWAY
4-70-WW218-1770A	Jet Wrench/Test Plug, Poly Jet
4-70-WW218-3000	Jet Wrench, Adjustable Mini/Neck Jet
4-70-WW218-0710	Jet Wrench, Adjustable Cluster Jet
4-70-WW218-1040	Escutcheon Pry Bar
4-70-WW630-0100	Wrench, for Front Access Light
4-70-WW218-1680	Jet Wrench, Adjustable on/off Mini Jet
	AMERICAN PRODUCTS / PENTAIR
4-70-AP452711	Wrench, Luxury/Diverter Jet
4-70-AP452717	Wrench, Luxury Micro Jet
	HYDROAIR
4-70-HA307825	Wrench, Slimline Standard & Micro
	ULTRA JET
4-70-UJV6110103	Wrench, Standard & Adjustable Jets

218-3000

218-1040

218-0710

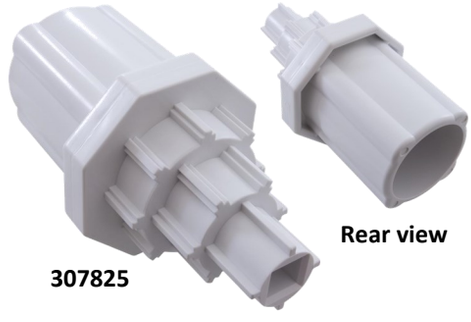

307825

452717

452711

218-1770A

218-1680

630-0100

6110103

©2018

CONTACT US IF YOU CAN'T FIND THE CARTRIDGE FILTER YOU NEED...CHANCES ARE GOOD THAT WE HAVE IT IN STOCK!

MASTER DELUXE© FILTER CARTRIDGES

CARTOUCHES de FILTRE MASTER DELUXE©

QUALITY FILTER CARTRIDGES - EXCELLENT VALUE!

CARTOUCHES DE FILTRE DE QUALITÉ - DE VALEUR EXCELLENTE!

REEMAY FILTRATION FABRIC

Part No. / No. de Pièce	Diameter / Diamètre	Length / Longueur	Top Hole / Trou du Haut	Bottom Hole / Trou du Bas	Sq. Ft. / Pi. C.	Case / Caisse	Cross Reference/Référence Croisée Pleatco	Unicel	Filbur
4.0 in. DIAMETER +									
4-55-M40101	4-1/4	4.0	2-1/16	2-1/16	10	27	PWW10	C-4310	FC-3077
4-55-M40257	4-5/8	6-5/8	2-1/8	1-1/2 MPT	19	9	PFF25P4	4CH-22	FC-2399
4-55-M40260	4-5/8	9-3/4	Handle/Poignée	1-1/2 MPT	25	9	PGS25P4	4CH-24	FC-0131
4-55-M40122	4-5/8	11-7/8	2-1/16	2-1/16	12	9	PA12	C-4312	FC-1210
4-55-M6473161	4-3/4	4-3/4	Closed/Fermé	2.0	--	18	6473-161 (OEM#)		FC-2767
4-55-M42524	4-3/4	7-1/16	Handle/Poignée	1-1/2 SAE	20	9	PSANT20-P3	4CH-925	FC-0126
4-55-M2540384	4-3/4	8.0	Handle/Poignée	2.0 SAE	25	20	2540-384 (OEM#)		
4-55-M40191	4-3/4	8-1/8	Handle/Poignée	1-1/2 MPT	25	9	PDM25P4(PTL18P4)	4CH-21	FC-0121
4-55-M2540387	4-3/4	12-1/2	Handle/Poignée	2.0 SAE	35	16	2540-387 (OEM#)		
4-55-M40503	4-3/4	14-3/4	Handle/Poignée	1-1/2 MPT	50	9	PTL50P-4	4CH-50	FC-0151
5.0 in. DIAMETER +									
4-55-M40352	5.0	4-5/8	2-1/8	2-1/8	35	9 pr.	PRB17.5SF-PAIR	C-4401	FC-2386
4-55-M40121	5.0	4-3/4	Handle/Poignée	1-7/8	18	9	PSS17.5	C-4302	FC-0183
4-55-M40505	5.0	6-5/8	2-1/8	2-1/8	50	9 pr.	PRB25SF-PAIR	C-4405	FC-2387
4-55-M40353	5.0	9-1/4	2-1/8	2-1/8	35	9	PRB35-IN	C-4335	FC-2385
4-55-M40355	5.0	9-1/4	Handle/Poignée	1-1/2 F*SAE	30	9	PWW35L	4CH-935	FC-0170
4-55-M40508	5.0	13-1/16	Handle/Poignée	1-1/2 F*SAE	50	9	PWW50L	4CH-949	FC-0172
4-55-M42513	5.0	13-5/16	2-1/8	2-1/8	25	9	PRB25-IN	C-4326	FC-2375
4-55-M40371	5.0	13-5/16	2-1/8	2-1/8	37	9	PRB37-IN-4	C-4637	FC-2380
4-55-M40506	5.0	13-5/16	2-1/8	2-1/8	50	9	PRB50-IN	C-4950	FC-2390
4-55-M007064D	5.0	13-5/16	2-1/8	2-1/8	800	9	Disposable Filter / Filtre Jetable		
4-55-M40751	5.0	20-1/8	2-1/8	2-1/8	75	9	PRB75	C-4975	FC-2395
4-55-M40752	5.0	23-5/8	2-1/8	2-1/8	75	9	PCAL75	C-4970	FC-2930
4-55-M41001	5.0	23-5/8	2-1/8	2-1/8	95	9	PCAL100	C-4995	FC-2940
4-55-M50403	5-1/4	11-1/4	Handle/Poignée	2.0 MPT	40	9	PJW40SC-F2M	5CH-402	FC-2811
4-55-M50451	5-5/16	10-1/8	2-1/8	2-1/8	50	9	PLBS50	C-5345	FC-2970
4-55-M50452	5-5/16	10.0	2-1/8	1-1/2 MPT	45	9	PFF50P4	5CH-45	FC-2401

MEASUREMENTS = INCHES / LES MESURES = POUCES

1-1/2" MPT = FINE THREAD / FILLETAGE FIN
1-1/2" SAE = COARSE THREAD / FILLETAGE GROSSIER

*** FEMALE / FEMELLE**

5.0 in. DIAMETER + continues on next page ...

©2018

ELM ENGINEERING LOGISTICS MARKETING®

CONTACTEZ NOUS SI VOUS NE TROUVER PAS LA CARTOUCHE DE FILTRE DONT VOUS AVEZ BESOIN…
IL Y A UNE BONNE CHANCE QUE NOUS L'AVONS EN STOCK!

MASTER DELUXE© FILTER CARTRIDGES

CARTOUCHES de FILTRE MASTER DELUXE©

REEMAY FILTRATION FABRIC

QUALITY FILTER CARTRIDGES - EXCELLENT VALUE!

CARTOUCHES DE FILTRE DE QUALITÉ - DE VALEUR EXCELLENTE!

Part No. / No. de Pièce	Diameter / Diamètre	Length / Longueur	Top Hole / Trou du Haut	Bottom Hole / Trou du Bas	Sq. Ft. / Pi. C.	Case / Caisse	Cross Reference/Référence Croisée Pleatco	Unicel	Filbur
5.0 in. DIAMETER + continued from previous page									
4-55-M50501	5-3/16	12-1/2	Handle/Poignée	2.0 MPT	50	9	PPM50SC-F2M	5CH-502	FC-0195
4-55-M50651	5-5/16	14-3/4	2-1/8	2-1/8	75	9	PLBS75	C-5374	FC-2971
4-55-M51002	5-3/8	21-5/16	2-1/8	2-1/8	80	9	PCST80	C-5396	FC-2975
4-55-M51351	5-3/8	30-1/8	2-1/8	2-1/8	120	9	PCST120	C-5351	FC-2976
4-55-M6473164	5-5/8	18-3/4	4-3/16	4-3/16	——	9	Disposable Filter / Filtre Jetable		
4-55-M50353	5-3/4	8-7/16	Handle/Poignée	1-1/2 MPT	35	9	PMAX50P4	5CH-35	— — —
4-55-M50353S	5-3/4	8-7/16	Handle/Poignée	1-1/2 SAE	35	9	PMAX50P3	5CH-35SAE	— — —
6.0 in. DIAMETER +									
4-55-M60251	6.0	5-1/2	Handle/Poignée	1-1/2 MPT	20	9	PTL20W-SV-P-4	6CH-25	FC-0305
4-55-M6473156	6.0	6-1/2	Cap/Bouchon	2.0, w/tabs	30	9	6473-156 (OEM#)		FC-2763
4-55-M60401	6.0	8-1/4	Handle/Poignée	1-1/2 SAE	40	9	PWW50P3	6CH-940	FC-0359
4-55-M60401MPT	6.0	8-1/4	Handle/Poignée	1-1/2 MPT	40	9	PWW50P4	6CH-940MPT	— — —
4-55-M60508	6.0	8.0	Handle/Poignée	1-1/2 MPT	35	9	PPG50P4	6CH-49	FC-0314
4-55-M60471	6.0	8-1/2	Handle/Poignée	1-1/2 MPT	47	9	PTL47W-P	6CH-47	FC-0315
4-55-M6473157	6.0	8-1/2	Cap/Bouchon	2.0, w/tabs	40	9	6473-157 (OEM#)		FC-2764
4-55-M6473158	6.0	12	Cap/Bouchon	2.0, w/tabs	50	9	6473-158 (OEM#)		FC-2765
4-55-M2000498	6.0	13-1/2	Cap/Bouchon	2.0 SAE	40	12	2000-498 (OEM#)		
4-55-M2540383	6.0	19	Cap/Bouchon	2.0 SAE	75	12	2540-383 (OEM#)		
4-55-M60521	6-5/8	14-7/8	Handle/Poignée	2.0 SAE	60	9	PJW60TL-F2S	6CH-960	FC-2800
4-55-M6000383A	6-5/8	15-7/16	Cap/Bouchon	2.0 SAE	60	9	6000-383A (OEM#)		
4-55-M60506	6-3/4	8.0	Handle/Poignée	2.0 MPT	50	4	PAS50SV-F2M	6CH-502	FC-0311
7.0 in. DIAMETER +									
4-55-M70251	7.0	9-11/16	3.0	3.0	25	4	PA25-4	C-7626	FC-1230
4-55-M70508	7.0	19-3/4	3.0	3.0	50	4	PA50	C-7656	FC-1240
4-55-M71061	7.0	25-1/2	3.0	3.0	106	4	PA106	C-7488	FC-1226
4-55-M71053	7.0	26-1/16	3.0	3.0	105	4	PCC105	C-7471	FC-1977
4-55-M70402	7-1/16	9-7/8	Handle/Poignée	1-1/2 MPT	40	4	PVT40P	7CH-40	FC-0435
4-55-M70506	7-1/16	14-13/16	Handle/Poignée	1-1/2 MPT	50	4	PVT50P	7CH-50	FC-0463
4-55-M70323	7-1/8	8-1/16	Handle/Poignée	1-1/2 MPT	32	4	PCS32P	7CH-32	FC-0425
4-55-M6540502	7-3/4	5.0	4-7/8	4-7/8	——	8	Disposable Filter / Filtre Jetable		

©2018

CONTACT US IF YOU CAN'T FIND THE CARTRIDGE FILTER YOU NEED...CHANCES ARE GOOD THAT WE HAVE IT IN STOCK!

MASTER DELUXE© FILTER CARTRIDGES

CARTOUCHES de FILTRE MASTER DELUXE©

QUALITY FILTER CARTRIDGES - EXCELLENT VALUE!

CARTOUCHES DE FILTRE DE QUALITÉ - DE VALEUR EXCELLENTE!

REEMAY FILTRATION FABRIC

Part No. / No. de Pièce	Diameter / Diamètre	Length / Longueur	Top Hole / Trou du Haut	Bottom Hole / Trou du Bas	Sq. Ft. / Pi. C.	Case / Caisse	Cross Reference/Référence Croisée Pleatco	Unicel	Filbur
8.0 in. DIAMETER +									
4-55-M80501	8.0	9.0	2-1/16	2.0 Slip	50	4	PCS50N	C-8450	FC-3310
4-55-M80753	8.0	13.0	2-1/16	2.0 Slip	75	4	PCS75N	C-8475	FC-3320
4-55-M2540381	8.0	15-1/2	Handle/Poignée	2.0 MPT	95	4	2540-381 (OEM#)		
4-55-M80402	8-1/4	6-7/8	4-1/16	4-1/16	45	4	PMA45-2004-R	C-8431	FC-1007
4-55-M6540501	8-1/2	14	2-1/2	2.0 SAE	80	4	6540-501 (OEM#)		
4-55-M81254	8-1/2	18-1/4	Closed/Fermé	2-1/2	125	4	PSD125U	C-8325	FC-2790
4-55-M81252	8-1/2	19	2-1/2	2.0 slip	125	4	PSD125-2000	C-8326	FC-2780
4-55-M6540488	8-1/2	19	2-1/2	2.0 slip	125	4	6540-488 (OEM#)		
4-55-M6540507	8-1/2	19	2-1/2	2-1/2 slip	125	4	6540-507 (OEM#)		
4-55-M6473165	8-1/2	19	5-5/8	2-3/16 slip	80	4	6473-165 (OEM#)		
4-55-M80755	8-15/16	17-3/8	4.0	4.0	75	4	PA76	C-8411	FC-1255
4-55-M81202	8-15/16	23-1/4	4.0	4.0	120	4	PA120	C-8412	FC-1293
10.0 in. DIAMETER +									
4-55-M10501	10.0	8-5/8	6.0	6.0	50	4	PAP50-4	C-9405	FC-0684
4-55-M10101	10-1/16	23-5/8	6.0	6.0	100	4	PAP100-4	C-9410	FC-0686
4-55-M10150	10-1/16	31-1/8	6.0	6.0	150	4	PAP150-4	C-9415	FC-0687
4-55-M10201	10-1/16	31-1/8	6.0	6.0	200	4	PAP200-4	C-9419	FC-0688

MEASUREMENTS = INCHES / LES MESURES = POUCES

1-1/2" MPT = FINE THREAD / FILLETAGE FIN
1-1/2" SAE = COARSE THREAD / FILLETAGE GROSSIER

MASTER DELUXE FILTER CARTRIDGES - FIND BY MFR

CARTOUCHES de FILTRE MASTER DELUXE– TROUVER PAR MFR

©2018

ELM ENGINEERING LOGISTICS MARKETING®

CONTACTEZ NOUS SI VOUS NE TROUVER PAS LA CARTOUCHE DE FILTRE DONT VOUS AVEZ BESOIN…
IL Y A UNE BONNE CHANCE QUE NOUS L'AVONS EN STOCK!

FILBUR FILTER CARTRIDGES - FIND BY SIZE

CARTOUCHES de FILTRE FILBUR – TROUVER PAR TAILLE

FILBUR FILTER CARTRIDGES
CARTOUCHES de FILTRE FILBUR

REEMAY FILTRATION FABRIC

THE LEADING MANUFACTURER OF OEM FILTERS
LE MANUFACTURIER PRINCIPAL DE FILTRES OEM

Part No. / No. de Pièce	Diameter / Diamètre	Length / Longueur	Top Hole / Trou du Haut	Bottom Hole / Trou du Bas	Sq. Ft. / Pi. C.	Case / Caisse	Cross Reference/Référence Croisée Pleatco	Unicel	Master Deluxe
4.0 in. DIAMETER +									
4-55-FilFC1001M	3-7/8	7-1/8	2-1/8	2-1/8	10	16	inner cartridge for M80402		
4-55-FilFC3077	4-1/4	4.0	2-1/16	2-1/16	10	27	PWW10	C-4310	M40101
4-55-FilFC2399	4-5/8	6-5/8	2-1/8	1-1/2 MPT	19	9	PFF25P4	4CH-22	M40257
4-55-FilFC0121	4-5/8	8.0	Handle/Poignée	1-1/2 MPT	19	9	PTL18P-4	4CH-21	M40191
4-55-FilFC0131	4-5/8	9-3/4	Handle/Poignée	1-1/2 MPT	25	9	PGS25P4	4CH-24	M40260
4-55-FilFC1210	4-5/8	11-7/8	2-1/16	2-1/16	12	9	PA12	C-4312	M40122
4-55-FilFC2767	4-3/4	4-3/4	Closed/Fermé	2.0	--	9	6473-161 (OEM#)		M6473161
4-55-FilFC0126	4-3/4	7-1/16	Handle/Poignée	1-1/2 SAE	20	9	PSANT20-P3	4CH-925	M42524
4-55-FilFC0136	4-3/4	8-1/8	Handle/Poignée	1-1/2 MPT	25	9	PDM25P4	4CH-24	M40191
4-55-FilFC2761	4-3/4	12-1/2	Handle/Poignée	2.0 SAE	35	16	2540-387 (OEM#)		M2540387
4-55-FilFC0151	4-3/4	14-3/4	Handle/Poignée	1-1/2 MPT	50	9	PTL50P-4	4CH-50	M40503
5.0 in. DIAMETER +									
4-55-FilFC2386	5.0	4-5/8	2-1/8	2-1/8	35	9 pr.	PRB17.5SF-PAIR	C-4401	M40352
4-55-FilFC0183	5.0	4-3/4	Handle/Poignée	1-7/8	18	9	PSS17.5	C-4302	M40121
4-55-FilFC2387	5.0	6-5/8	2-1/8	2-1/8	50	9 pr.	PRB25SF-PAIR	C-4405	M40505
4-55-FilFC2385	5.0	9-1/4	2-1/8	2-1/8	35	9	PRB35-IN	C-4335	M40353
4-55-FilFC0170	5.0	9-1/4	Handle/Poignée	1-1/2 F*SAE	30	9	PWW35L	4CH-935	M40355
4-55-FilFC0172	5.0	13-1/16	Handle/Poignée	1-1/2 F*SAE	50	9	PWW50L	4CH-949	M40508
4-55-FilFC2375	5.0	13-5/16	2-1/8	2-1/8	25	9	PRB25-IN	C-4326	M42513
4-55-FilFC2380	5.0	13-5/16	2-1/8	2-1/8	37	9	PRB37-IN-4	C-4637	M40371
4-55-FilFC2390	5.0	13-5/16	2-1/8	2-1/8	50	9	PRB50-IN	C-4950	M40506
4-55-FilFC2392	5.0	13-5/16	2-1/8	2-1/8	800	9	Disposable Filter / Filtre Jetable		
4-55-FilFC2395	5.0	20-1/8	2-1/8	2-1/8	75	9	PRB75	C-4975	M40751
4-55-FilFC2930	5.0	23-5/8	2-1/8	2-1/8	75	9	PCAL75	C-4970	M40752
4-55-FilFC2940	5.0	23-5/8	2-1/8	2-1/8	95	9	PCAL100	C-4995	M41001
4-55-FilFC0303	5-1/16	8-1/2	Handle/Poignée	3-1/2 MPT	30	9	PLAS35	5CH-203	— — —
4-55-FilFC2811	5-1/4	11-1/4	Handle/Poignée	2.0 MPT	40	9	PJW40SC-F2M	5CH-402	M50403
4-55-FilFC0195	5-3/16	12-1/2	Handle/Poignée	2.0 MPT	50	9	PPM50SC-F2M	5CH-502	M50501

* FEMALE / FEMELLE

5.0 in. DIAMETER + continues on next page ...

©2018

CONTACT US IF YOU CAN'T FIND THE CARTRIDGE FILTER YOU NEED...CHANCES ARE GOOD THAT WE HAVE IT IN STOCK!

FILBUR FILTER CARTRIDGES
CARTOUCHES de FILTRE FILBUR

THE LEADING MANUFACTURER OF OEM FILTERS
LE MANUFACTURIER PRINCIPAL DE FILTRES OEM

Part No. / No. de Pièce	Diameter / Diamètre	Length / Longueur	Top Hole / Trou du Haut	Bottom Hole / Trou du Bas	Sq. Ft. / Pi. C.	Case / Caisse	Cross Reference/Référence Croisée Pleatco	Unicel	Master Deluxe
5.0 in. DIAMETER + continued from previous page									
4-55-FilFC2401	5-5/16	10.0	2-1/8	1-1/2 MPT	45	9	PFF50P4	5CH-45	M50402
4-55-FilFC2970	5-5/16	10-1/8	2-1/8	2-1/8	50	9	PLBS50	C-5345	M50451
4-55-FilFC2971	5-5/16	14-3/4	2-1/8	2-1/8	75	9	PLBS75	C-5374	M50651
4-55-FilFC2975	5-3/8	21-5/16	2-1/8	2-1/8	80	9	PCST80	C-5396	M51002
4-55-FilFC2976	5-3/8	30-1/8	2-1/8	2-1/8	120	9	PCST120	C-5351	M51351
6.0 in. DIAMETER +									
4-55-FilFC0305	6.0	5-1/2	Handle/Poignée	1-1/2 MPT	20	9	PTL20W-SV-P-4	6CH-25	M60251
4-55-FilFC2763	6.0	6-1/2	Cap/Bouchon	2.0, w/tabs	30	9	6473-156 (OEM#)		M6473156
4-55-FilFC0359	6.0	8-1/4	Handle/Poignée	1-1/2 SAE	40	9	PWW50P3	6CH-940	M60401
4-55-FilFC0314	6.0	8.0	Handle/Poignée	1-1/2 MPT	35	9	PPG50P4	6CH-49	M60508
4-55-FilFC0315	6.0	8-1/2	Handle/Poignée	1-1/2 MPT	47	9	PTL47W-P	6CH-47	M60471
4-55-FilFC2764	6.0	8-1/2	Cap/Bouchon	2.0, w/tabs	40	9	6473-157 (OEM#)		M6473157
4-55-FilFC3915	6.0	10-1/2	1-15/16	1-15/16	30	9	PWK30	C-6430	— — —
4-55-FilFC2765	6.0	12	Cap/Bouchon	2.0, w/tabs	50	9	6473-158 (OEM#)		M6473158
4-55-FilFC2718	6.0	19	Cap/Bouchon	2.0 SAE	75	12	2540-383 (OEM#)		M2540383
4-55-FilFC2800	6-5/8	14-7/8	Handle/Poignée	2.0 SAE	60	9	PJW60TL-F2S	6CH-960	M60521
4-55-FilFC0311	6-3/4	8.0	Handle/Poignée	2.0 MPT	50	4	PAS50SV-F2M	6CH-502	M60506
7.0 in. DIAMETER +									
4-55-FilFC0418	7.0	7-1/4	Handle/Poignée	2.0 MPT	30	4	PAS35-2	7CH-322	— — —
4-55-FilFC1230	7.0	9-11/16	3.0	3.0	25	4	PA25-4	C-7626	M70251
4-55-FilFC0470	7.0	14-3/4	Handle/Poignée	2.0 MPT	75	4	PTL75XW-F2M	7CH-752	— — —
4-55-FilFC1240	7.0	19-3/4	3.0	3.0	50	4	PA50	C-7656	M70508
4-55-FilFC1225	7.0	19-5/8	3.0	3.0	81	4	CX580XRE	C-7483	— — —
4-55-FilFC1226	7.0	25-1/2	3.0	3.0	106	4	PA106	C-7488	M71061
4-55-FilFC0435	7-1/16	9-7/8	Handle/Poignée	1-1/2 MPT	40	4	PVT40P	7CH-40	M70402
4-55-FilFC0463	7-1/16	14-13/16	Handle/Poignée	1-1/2 MPT	50	4	PVT50P	7CH-50	M70506
4-55-FilFC0425	7-1/8	8-1/16	Handle/Poignée	1-1/2 MPT	32	4	PCS32P	7CH-32	M70323
4-55-FilFC3058	7-1/8	5-7/8	Castle/Closed	2.0 twist lok	35	4	D1 SpaBerry	C-7335	— — —

MEASUREMENTS = INCHES / LES MESURES = POUCES

1-1/2" MPT = FINE THREAD / FILLETAGE FIN
1-1/2" SAE = COARSE THREAD / FILLETAGE GROSSIER

8.0 in. DIAMETER + continues on next page ...

©2018

CONTACTEZ NOUS SI VOUS NE TROUVER PAS LA CARTOUCHE DE FILTRE DONT VOUS AVEZ BESOIN…
IL Y A UNE BONNE CHANCE QUE NOUS L'AVONS EN STOCK!

FILBUR FILTER CARTRIDGES - FIND BY MFR

CARTOUCHES de FILTRE FILBUR – TROUVER PAR MFR

FILBUR FILTER CARTRIDGES
CARTOUCHES de FILTRE FILBUR

REEMAY FILTRATION FABRIC

THE LEADING MANUFACTURER OF OEM FILTERS
LE MANUFACTURIER PRINCIPAL DE FILTRES OEM

Part No. / No. de Pièce	Diameter / Diamètre	Length / Longueur	Top Hole / Trou du Haut	Bottom Hole / Trou du Bas	Sq. Ft. / Pi. C.	Case / Caisse	Cross Reference/Référence Croisée: Pleatco	Unicel	Master Deluxe
8.0 in. DIAMETER +									
4-55-FilFC0536	8.0	5-3/4	Handle/Poignée	2.0 SAE	50	4	PBF50	8CH-950	— — —
4-55-FilFC3310	8.0	9.0	2-1/8	2.0 Slip	50	4	PCS50N	C-8450	M80501
4-55-FilFC3320	8.0	13.0	2-1/8	2.0 Slip	75	4	PCS75N	C-8475	M80753
4-55-FilFC2781	8.0	15-1/2	Handle/Poignée	2.0 MPT	95	4	2540-381 (OEM#)		M2540381
4-55-FilFC1007	8-1/4	6-7/8	4-1/16	4-1/16	45	4	PMA45-2004-R	C-8341	M80402
4-55-FilFC2790	8-1/2	18-1/4	Closed/Fermé	2-1/2	125	4	PSD125U	C-8325	M81254
4-55-FilFC2780	8-1/2	19	2-1/2	2.0 slip	125	4	6540-488 (OEM#)		M81252
4-55-FilFC1255	8-15/16	17-3/8	4.0	4.0	75	4	PA76	C-8411	M80755
4-55-FilFC1293	8-15/16	23-1/4	4.0	4.0	120	4	PA120	C-8412	M81202
10.0 in. DIAMETER +									
4-55-FilFC0684	10.0	8-5/8	6.0	6.0	50	4	PAP50-4	C-9405	M10501
4-55-FilFC0686	10-1/16	23-5/8	6.0	6.0	100	4	PAP100-4	C-9410	M10101
4-55-FilFC0687	10-1/16	31-1/8	6.0	6.0	150	4	PAP150-4	C-9415	M10150
4-55-FilFC0688	10-1/16	31-1/8	6.0	6.0	200	4	PAP200-4	C-9419	M10201

MEASUREMENTS = INCHES / LES MESURES = POUCES

1-1/2" MPT = FINE THREAD / FILLETAGE FIN
1-1/2" SAE = COARSE THREAD / FILLETAGE GROSSIER

TECH How to Measure a Filter Cartridge

1. Measure the outside diameter (**A**)
2. Measure the overall length including end caps (**B**)
3. If the top and/or bottom end cap is open, measure the inside diameter of the opening (**C**)
4. Identify the mfr. and part# of the filter housing in which the replacement cartridge will be installed
5. Identify if there is a center core
6. Count the number of pleats

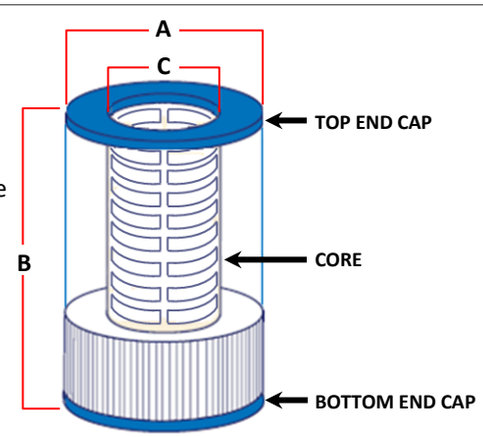

FILTER CARTRIDGE MEASUREMENTS MAY VARY SLIGHTLY ALWAYS ALLOW A TOLERANCE OF +/- 1/16 in. (1.6 mm)

©2018

SPECIALTY FILTERS AND PARTS

SPECIALTY FILTERS

Part No.	Description
4-55-S2PFM	Pre-Filter, 0.5 Micron Carbon Block, Metal Stop
4-55-M007064D	Disposable Depth Filter w/mesh wrap; 5.0"dia x 13-5/16"long, 2-18"ID open top/bottom

Pre-Filters up to 7500 gallons / 28,400 liters!

minimizes the potential for future stain and scale issues!
Initial Chemical Balancing is Easier!

Reduces
phosphates, rust, grit, sediment
arsenic, cadmium, chlorine, odours
cloudiness, vocs, aluminum
iron, lead, copper, mercury

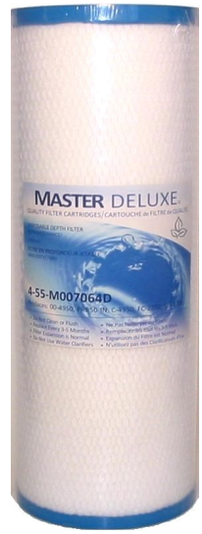

M007064D

replaces
PRB50-IN
C-4950
FC-2390
PRB25-IN
C-4326
FC-2375
PRB37-IN
C-4637
FC-2380

Micro-pore design for incredibly 'polished' water!
Mesh wrap & molded end caps prevent swelling and jamming in filter housing.

FILTER ADAPTERS

Part No.	Description
4-55-FAD-MPT1	1-1/2" MPT (fine thread), no tabs
4-55-FAD-MPT	1-1/2" MPT (fine thread), with tabs
4-55-FAD-SAE	1-1/2" SAE (coarse thread), with tabs
4-55-WW400-9120	Cartridge Mount Assy, 1-1/2"FPT
4-55-RD8003100	Filter Cartridge Adapter; 1-1/2"SAE-f

400-9120

800-3100

MPT1

MPT

SAE

NOTES:

©2018

FILTERS - WATERWAY

FILTERS - WATERWAY

Waterway Filter Parts - p.90-92

FILTER - TOP LOAD

Part No.	Description
4-65-WW502-5010	2.0”- 50 sq. ft. c/w Bypass
4-65-WW502-7510	2.0”- 75 sq. ft. c/w Bypass

502-5010

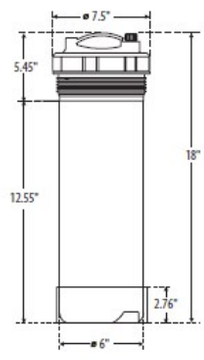

502-7510

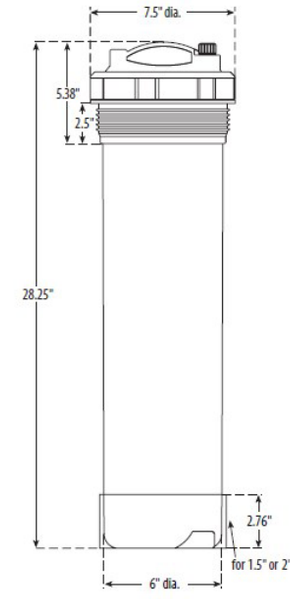

BOÎTIER de FILTRES - WATERWAY

SKIM FILTER - DYNA-FLO

Part No.	Description
4-65-WW510-9550	2.0”- 50 sq. ft. white
4-65-WW510-9557	2.0”- 50 sq. ft. grey
4-65-WW510-6550	2.0”- 50 sq. ft. white
4-65-WW510-6557	2.0”- 50 sq. ft. grey

510-6550

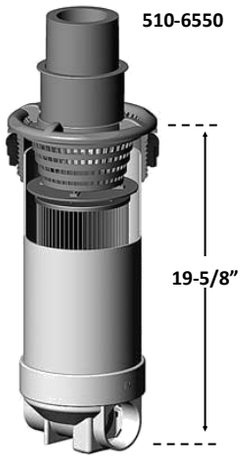

510-9550

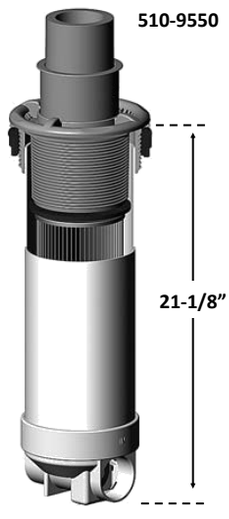

FILTER - IN-LINE

Part No.	Description
4-65-WW500-2570	1.5”- 25 sq. ft. w/bypass

500-2570

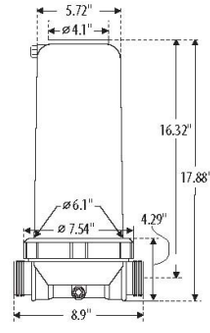

FILTER NICHE

Part No.	Description
4-65-WW500-1021	Black w/2-cup holder (fits WW and Pentair)

500-1021

©2018

SKIM FILTERS - WATERWAY

SKIM FILTER - FRONT ACCESS 10 SQ.FT.

Part No.	Description
4-65-WW510-1600	White
4-65-WW510-1607	Grey

510-1600

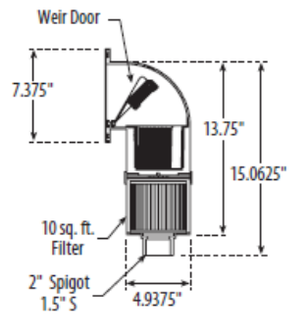

Includes 1 x 10 sq. ft. Filter Cartridge

SKIM FILTER - FRONT ACCESS 20 SQ.FT.

Part No.	Description
4-65-WW510-1650T	White
4-65-WW510-1657T	Grey

510-1650T

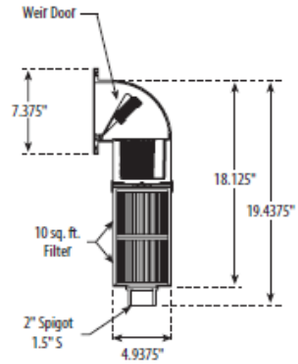

Includes 2 x 10 sq. ft. Filter Cartridge

SKIMMERS - WATERWAY

SKIMMER - FRONT ACCESS

Part No.	Description
4-65-WW510-1500	White
4-65-WW510-1507	Grey

510-1500

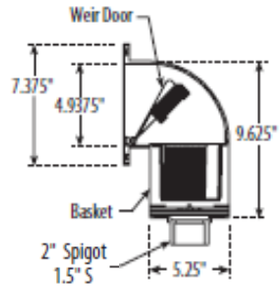

SKIMMER - STRIP STYLE

Part No.	Description
4-65-WW640-6920	White
4-65-WW640-6927	Grey

Requires 1-1/2" Hole, Includes Nut

Waterway Skim Filter Parts - p.92

©2018

Vous ne trouvez pas ce dont vous cherchez?
Contactez nous...et nous ferons notre mieux de le trouver pour vous!

FILTERS - RAINBOW (PENTAIR)

Rainbow Filter Parts - p.93-94

FILTER - TOP LOAD RTL

Part No.	Description
4-65-PenR172504B	2.0”- 50 sq.ft.
4-65-PenR172503	2.0”- 75 sq.ft.

FILTER - TOP LOAD RCF

Part No.	Description
4-65-PenR172535	2.0”- 50 sq.ft. w/Dispenser
4-65-PenR172503C	2.0”- 75 sq.ft. w/Dispenser

172504B

172503

172535

172503C

FILTER - IN-LINE RDC

Part No.	Description
4-65-PenR172426A	1.5”- 25 sq.ft.

172426A

FILTER NICHE

Part No.	Description
4-65-WW500-1021	Black w/2-cup holder (fits WW and Pentair)

500-1021

SKIM FILTER - DSF

Part No.	Description
4-65-PenR172554M	2.0”- 35 sq.ft.
4-65-PenR172551	2.0”- 50 sq.ft.

172554M

172551

NOTE - most parts are still available. See **p.94** for details

SKIM FILTER - LILY PAD DFML

Part No.	Description
4-65-PenR172670	2.0”- 35 sq.ft.
4-65-PenR172674	2.0”- 50 sq.ft.

172674

172670

©2018

FILTER PARTS - WATERWAY

TOP-LOAD FILTER - 1.5"& 2.0"

Item	Part No.	Description
1	4-65-WW500-1000	Lock Ring Assy.
2	4-65-WW715-1001	Air Relief Plug
3	4-65-WW805-0114	O-Ring, Air Relief Plug
4	4-65-WW511-1000	Filter Lid
5	4-65-WW805-0360	O-Ring, Filter Lid
6	4-65-WW500-1078	Brominator Assy.- clear
7	4-65-WW519-1051	Mineral Canister Holder
8	4-65-WW500-1060	Flow Restriction Tube
9	4-65-WW711-1010	Spacer Ring
10	4-55-M42513	Cartridge, 25 sq.ft.
	4-55-M40506	Cartridge, 50 sq.ft.
	4-55-M40752	Cartridge, 75 sq.ft.
	4-55-M41001	Cartridge, 100 sq.ft.
11	4-65-WW550-5000	1.5" Filter Body w/Bypass
	4-65-WW550-4990	1.5" Filter Body w/Plug
	4-65-WW550-5010	2.0" Filter Body w/Bypass
	4-65-WW550-5060	2.0" Filter Body w/Plug
12	4-65-WW550-5110	1.5" Long Body w/Bypass
	4-65-WW550-5150	1.5" Long Body w/Plug
	4-65-WW550-5230	2.0" Long Body w/Bypass
	4-65-WW550-5220	2.0" Long Body w/Plug
13	4-65-WW718-1000	Nut, Filter Body
14	4-65-WW715-1010	Plug - 1.5"
	4-65-WW715-9900	Plug - 2.0"
15	4-65-WW600-1040	Bypass Valve - 2.0"
16	4-65-WW600-1000	Bypass Valve - 1.5"
17	4-65-WW500-1021	Filter Niche & Lid, Black
18	4-65-PenR172452	Filter Base

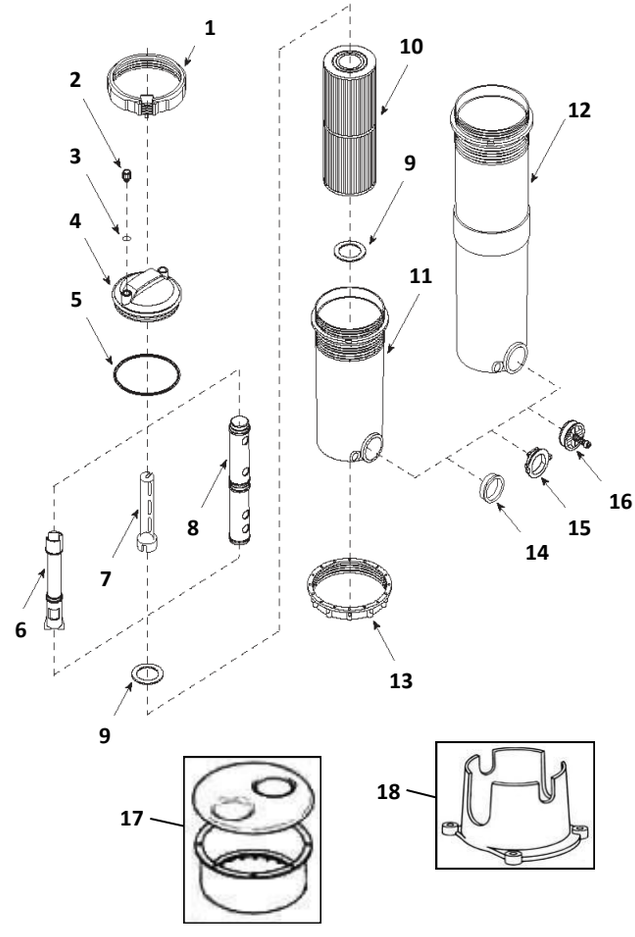

IN-LINE FILTER - 1.5"

Item	Part No.	Description
1	4-65-WW500-1000	Lock Ring Assy.
2	4-65-WW515-1010	Filter Body
3	4-65-WW805-0114	O-Ring, Air Relief Plug
4	4-65-WW715-1001	Air Relief Plug
5	4-65-WW711-1010	Spacer Ring
6	4-55-M42513	Cartridge, 25 sq.ft.
	4-55-M40506	Cartridge, 50 sq.ft.
7	4-65-WW805-0360	O-Ring, Filter Lid
8	4-65-WW511-1010	Filter Lid - 1.5"
9	4-65-WW715-1010	Plug - 1.5"
10	4-65-WW600-1000	Bypass Valve - 1.5"

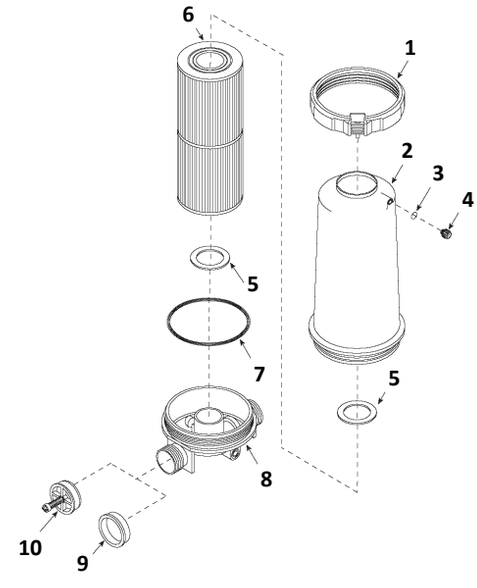

©2018

Vous ne trouvez pas ce dont vous cherchez?
Contactez nous...et nous ferons notre mieux de le trouver pour vous!

FILTER PARTS - WATERWAY

DYNA-FLO TOP MOUNT SKIM FILTER

Item	Part No.	Description
1	4-65-WW519-8071	Trim Ring, Low Vol., BLK
	4-65-WW519-8077	Trim Ring, Low Vol., GRY
2	4-65-WW519-8051	Trim Ring, High Vol., BLK
	4-65-WW519-8057	Trim Ring, High Vol., GRY
3	4-65-WW550-2631	Weir Assy., BLK
	4-65-WW550-2637	Weir Assy., GRY
4	4-65-WW519-8000	Basket, 6.4”Øx5.62”h, WHT
5	4-65-WW519-3010	Diverter Plate (2pc)
6	4-65-WW500-2681	Basket, 6.35”Øx2.75”h, BLK
	4-65-WW500-2687	Basket, 6.35”Øx2.75”h, GRY
7	4-55-M42513	Cartridge, 25 sq.ft.
	4-55-M40353	Cartridge, 35 sq.ft.
	4-55-M40506	Cartridge, 50 sq.ft.
8	4-65-WW711-1010	Spacer Ring
9	n/a	n/a
10	4-65-WW600-1040	Bypass Valve - 2.0”
	4-65-WW600-1020*	Bypass Valve - 2.5”
11	4-65-WW718-1000	Nut, Filter Body

* DYNA-FLO XL only

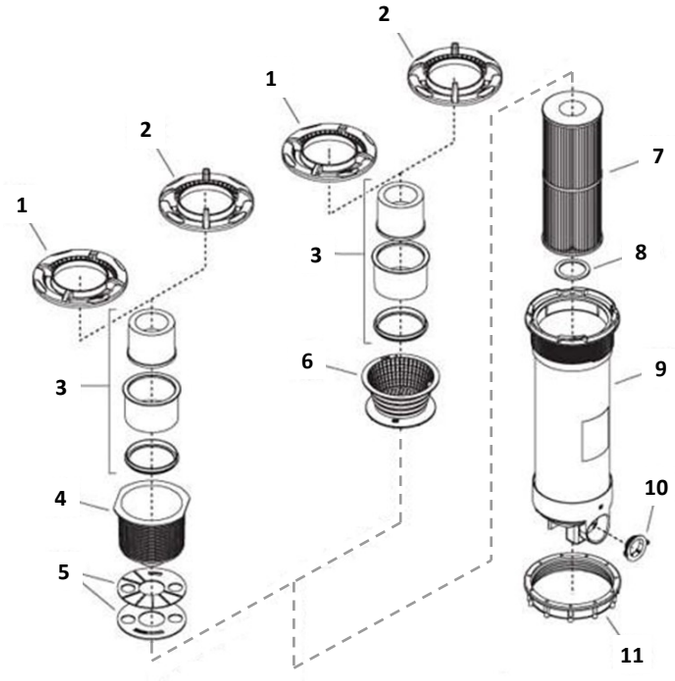

TOP MOUNT SKIM FILTER

Item	Part No.	Description
1	4-65-WW519-2080	Weir, round, white*
	4-65-WW519-2087	Weir, round, grey
2	4-65-WW519-2090	Basket
3	4-65-WW519-3010	Diverter Plate
4	4-55-M42513	Cartridge, 25 sq.ft.
	4-55-M40506	Cartridge, 50 sq.ft.
5	4-65-WW711-1010	Spacer Ring
6	n/a	n/a
7	4-65-WW715-1010	Plug - 1.5”
	4-65-WW715-9900	Plug - 2.0”
8	4-65-WW600-1000	Bypass Valve - 1.5”
9	4-65-WW600-1040	Bypass Valve - 2.0”
10	n/a	n/a
11	4-65-WW718-1000	Nut, Filter Body

*** Discontinued. Use 4-65-WW519-2087**

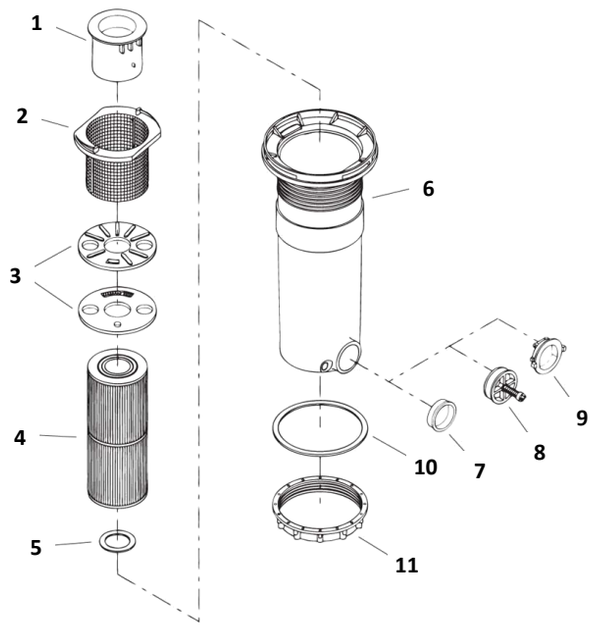

©2018

FILTER PARTS - WATERWAY

FRONT ACCESS SKIM FILTER

Item	Part No.	Description
1	4-65-WW519-3060	Weir Door - White
	4-65-WW519-3067	Weir Door - Grey
2	4-65-WW865-1000	Foam, Weir Door
3	4-65-WW519-3090	Trim Plate - White
	4-65-WW519-3097	Trim Plate - Grey
4	4-65-WW519-3080	Mounting Plate, short throat
	4-65-WW519-3180	Mounting Plate, long throat
5	n/a	n/a
6	4-65-WW806-1040	Mounting Gasket
7	4-65-WW550-5020	Filter Body - 1.5"
	4-65-WW550-5160	Filter Body - 2.0"
8	4-65-WW715-1010	Plug - 1.5"
	4-65-WW715-9900	Plug - 2.0"
9	4-65-WW600-1000	Bypass Valve - 1.5"
	4-65-WW600-1040	Bypass Valve - 2.0"
10	4-65-WW711-1010	Spacer Ring
11	4-55-M40352	Cartridge, pair, 35 sq.ft.
	4-55-M40505	Cartridge, pair, 50 sq.ft.
12	4-65-WW519-3100	Collar plate
13	4-65-WW519-3010	Diverter Plate
14	4-65-WW550-1220	Basket Assy. w/handle
15	4-65-WW519-3150	Vacuum Plate
16	4-65-WW519-3030	Lid - White

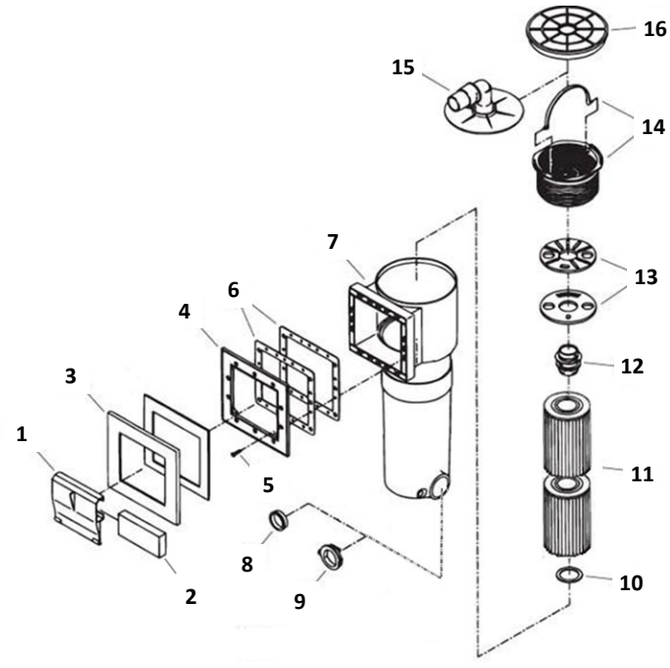

SPA SKIMMER & SKIM FILTERS

Item	Part No.	Description
1	4-65-WW519-4050	Weir Door - White
2	4-65-WW865-1000	Foam, Weir Door
3	4-65-WW519-4090	Trim Plate - White
4	4-65-WW519-4097	Trim Plate - Grey
5	4-65-WW519-4030	Basket
6	n/a	n/a
7	4-65-WW550-4060	Body w/Base - 1.5"
	4-65-WW550-4080	Body w/10sq.ft base - 1.5"
	4-65-WW550-4090	Body w/20sq.ft base - 1.5"
8	4-65-WW806-1070	Gasket - Mounting Plate
9	4-65-WW519-1600	Mounting Plate *(optional)*
10	4-65-WW550-1500	Diverter Plate
	4-65-WW519-4000	Diverter Plate
11	4-55-M40101	Cartridge, 10 sq.ft.
12	4-65-WW417-6080	Adapter, Hose *(optional)*
13	4-65-WW519-4020	Hinge, Weir Door (each)

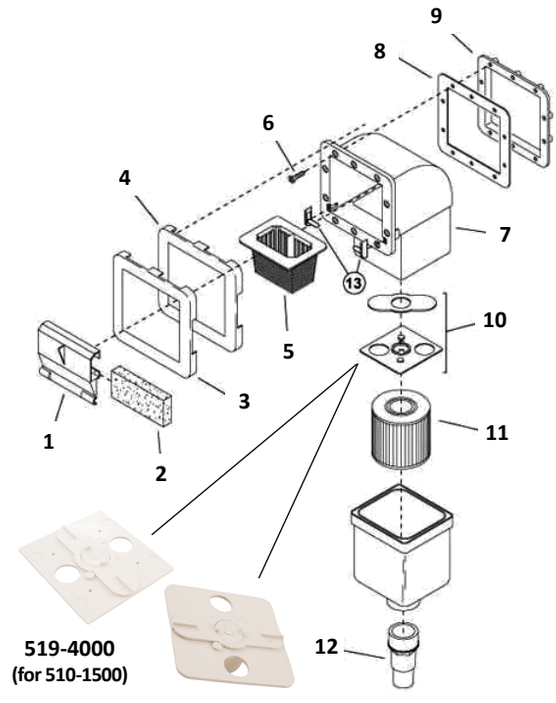

©2018

FILTER PARTS - RAINBOW (PENTAIR)

TOP-LOAD FILTER - RTL / RCF

Item	Part No.	Description
1	4-65-PenR172214	Lock Ring
2	4-65-PenR172224X	Air Vent Valve
3	4-65-PenR172221	O-Ring, Air Vent Valve
4	4-65-PenR172222	Cartridge Gasket
5	4-65-PenR172223	O-Ring, Filter Lid
6	4-55-M42513	Cartridge, 25 sq.ft.
	4-55-M40506	Cartridge, 50 sq.ft.
7	4-65-PenR172225X	Plug - 1.5”
	4-65-PenR172679	Plug - 2.0”
8	4-65-PenR172226X	Bypass Valve - 1.5”
	4-65-PenR172682	Bypass Valve - 2.0”
10	4-65-PenR172370	Body Locking Flange
12	4-65-PenR172374	Lock Spring
13	4-65-PenR172375	Screw, Lock Spring
14	4-65-PenR172388	Body 50 sq.ft. - 1.5”s
	4-65-PenR172428	Body 50 sq.ft. - 2.0”s
	4-65-PenR172638	Body 75 sq.ft. - 2.0”s
15	4-65-PenR172385	Filter Lid Assy.
16	4-65-PenR172452	Filter Base
17	4-65-WW500-1021	Filter Niche & Lid, Black
18	4-65-PenR172540	Dispenser, RCF
19	4-65-PenR172406	Check Valve, Dispenser
20	4-65-PenR172401	Screen, Check Valve
21	4-65-PenR172451	O-Ring, Check Valve
---	4-65-PenR172400	Inlet Screen, Dispenser

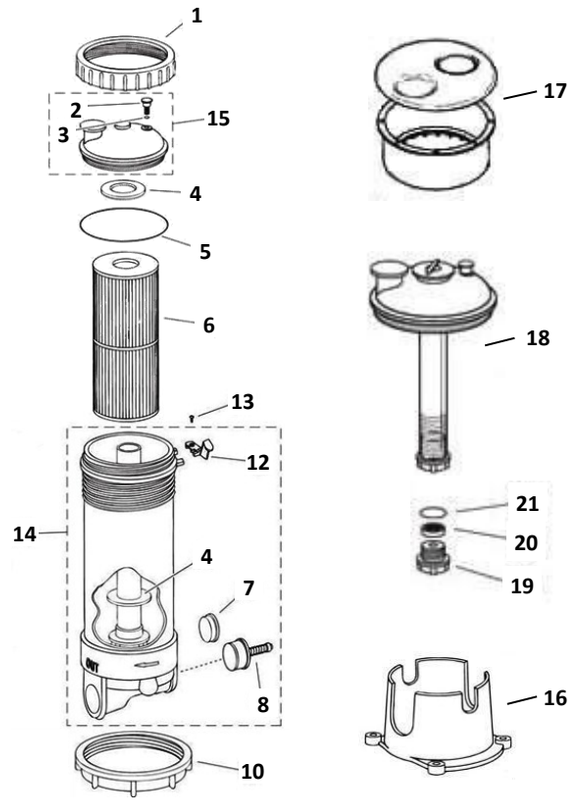

IN-LINE FILTER - RDC

Item	Part No.	Description
1	4-65-PenR172213C	Manifold Assy - 1.5”FPT
	4-65-PenR172213SC	Manifold Assy - 1.5”S
2	4-65-PenR172224X	Air Vent/Drain Valve
3	4-65-PenR172221	O-Ring, Air Vent/Drain Valve
4	4-65-PenR172226X	Bypass Valve - 1.5”
5	4-65-PenR172225X	Plug - 1.5”
	4-65-PenR172679	Plug - 2.0”
6	4-65-PenR172222	Cartridge Gasket
7	4-55-M42513	Cartridge, 25 sq.ft.
	4-55-M40506	Cartridge, 50 sq.ft.
8	4-65-PenR172223	O-Ring, Filter Manifold
9	4-65-PenR172212	Filter Body
10	4-65-PenR172214	Lock Ring
12	4-65-PenR172232X	Support Ring Gasket

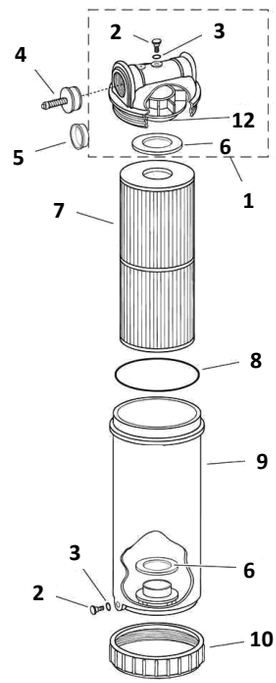

©2018

FILTER PARTS - RAINBOW (PENTAIR)

SKIM FILTER - Lily Pad DFML

Item	Part No.	Description
1	4-65-PenR172660DG	Lily Skimmer Float Assy - GRY
	4-65-PenR172660BK	Lily Skimmer Float Assy - BLK
2	4-65-PenR172661DG	Basket w/Restrictor - GRY
	4-65-PenR172661BK	Basket w/Restrictor - BLK
3	4-65-PenR172662DG	Dispenser w/Basket Assy - GRY
	4-65-PenR172662BK	Dispenser w/Basket Assy - BLK
4	4-55-M42513	Cartridge, 25 sq.ft.
	4-55-M40506	Cartridge, 50 sq.ft.
5	4-65-PenR172665X	Filter Body - 2.0"
7	4-65-PenR172682	Bypass Valve - 2.0"
8	4-65-PenR172370	Body Locking Flange
9	4-65-PenR172406	Check Valve, Dispenser
10	4-65-PenR172401	Screen, Check Valve
11	4-65-PenR172451	O-Ring, Check Valve
---	4-65-PenR172400	Inlet Screen, Dispenser

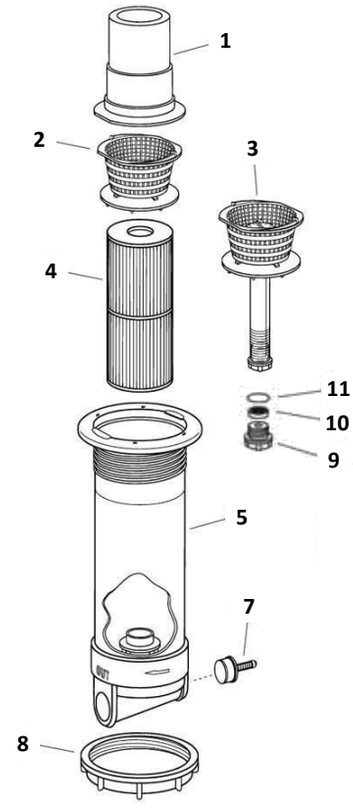

SKIM FILTER - DSF

Item	Part No.	Description
1	4-65-PenR172468	Cover
2	4-65-PenR172467WH	Basket - WHITE
	4-65-PenR172467DG	Basket - GREY
3*	4-65-PenR172466*	Diverter Plate Assy.
4	4-65-PenR172465	Cartridge Plug
5	4-55-M40352	Cartridge, pair, 35 sq.ft.
	4-55-M40505	Cartridge, pair, 50 sq.ft.
6	4-65-PenR172608	Cartridge Puller
7	4-65-PenR172226X	Bypass Valve - 1.5"
	4-65-PenR172684	Bypass Valve - 2.0"
8	4-65-PenR172480	90˚Vac Plate Adapter
9	4-65-PenR172479	Vac Plate
10	4-65-PenR172470	Gasket, Rear
11	4-65-PenR172471	Gasket, Face Plate
12	4-65-PenR172469WH	Weir - WHITE
	4-65-PenR172469DG	Weir - GREY
13	4-65-PenR172555WH	Faceplate Kit - WHITE
	4-65-PenR172555DG	Faceplate Kit - GREY

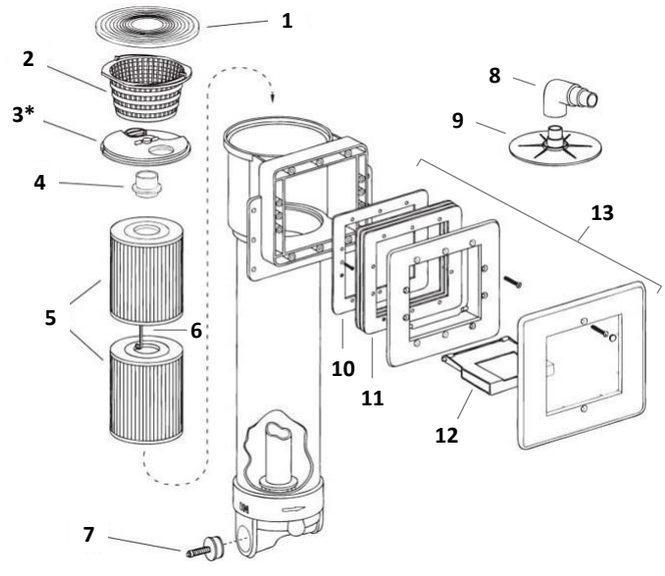

* discontinued by mfr

©2018

SUCTIONS - WATERWAY

HI-FLO SPC-2 VP 3.5” 128GPM

Part No.	Description
4-65-WW640-3250VP	White, 1-1/2”s
4-65-WW640-3257VP	Grey, 1-1/2”s
4-65-WW640-3280VP	White, 1-1/2”s 90Èll
4-65-WW640-3287VP	Grey, 1-1/2”s 90Èll
4-65-WW642-3250V	Cover - White
4-65-WW642-3257V	Cover - Grey

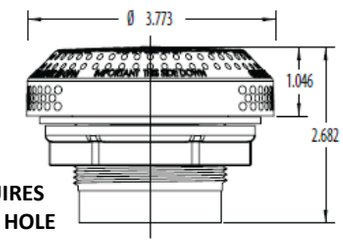

REQUIRES 2-3/8” HOLE

ULTRA HI-FLO 3.5” 160GPM

Part No.	Description
4-65-WW640-3491VP	Black, 1-1/2”s
4-65-WW640-3497VP	Grey, 1-1/2”s
4-65-WW642-3271V	Cover - Black
4-65-WW642-3277V	Cover - Grey

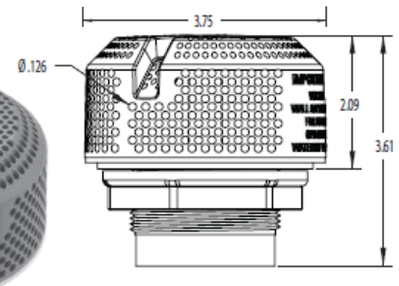

REQUIRES 2-3/8” HOLE

SUPER HI-FLO SPC-3 VP 5.0” 251GPM

Part No.	Description
4-65-WW640-3780V	White, 2.0”s
4-65-WW640-3781V	Black, 2.0”s
4-65-WW640-3787V	Grey, 2.0”s
4-65-WW640-3790V	White, 2-1/2”s
4-65-WW640-3797V	Grey, 2-1/2”s
4-65-WW640-3570SV	Stainless Steel, 2.0”
4-65-WW640-3580SV	Stainless Steel, 2-1/2”
4-65-WW642-3630V	Cover - White
4-65-WW642-3631V	Cover - Black
4-65-WW642-3637V	Cover - Grey
4-65-WW916-0038V *	Cover - Stainless Steel

* Special Order

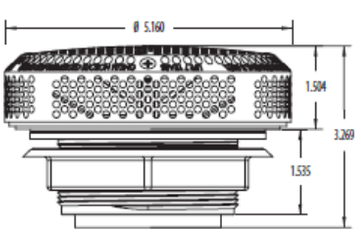

REQUIRES 3-1/4” HOLE

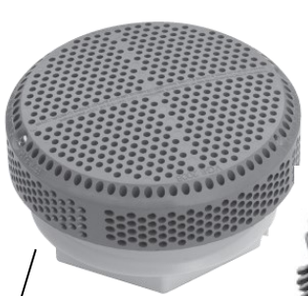

replaces this suction fitting

ULTRA FLO 5.0” 264GPM

Part No.	Description
4-65-WW640-3940VP	White, 2.0”s
4-65-WW640-3947VP	Grey. 2.0”s
4-65-WW640-3930VP	White, 2.5”s
4-65-WW640-3937VP	Grey. 2.5”s
4-65-WW642-3291V P	Cover - Black
4-65-WW642-3297V P	Cover - Grey

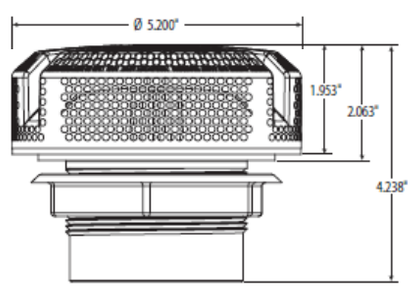

REQUIRES 3-1/4” HOLE

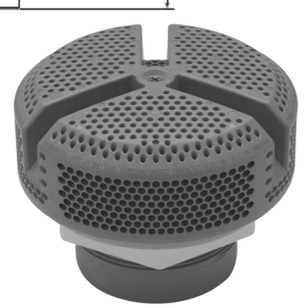

For more information on VGB 2008: U.S. Consumer Product Safety Commission - http://www.cpsc.gov/cpscpub/pubs/363.pdf
Publication# 363-009081 - "Guidelines for Addressing Entrapment Hazards with Pools and Spas”

©2018

SUCTION FITTINGS - WATERWAY

NON VACUUM BREAK FITTINGS

*** Limited Quantities Available ***

Part No.	Description
2-1/2" SUPER HI-FLO SPC-3 VP and 2-1/2" ULTRA FLO	
4-65-WW642-3680	2-1/2"Sx2.0"S Straight
4-65-WW642-3700	2-1/2"Sx2.0"S 90˚Ell
4-65-WW642-3610	2-1/2"S 90˚Ell
4-65-WW642-3730	2.0"S 90˚Threaded Ell
4-65-WW642-3750	2.0"S Threaded Straight

642-3730

642-3750

642-3680

642-3700

642-3610

VACUUM BREAK FITTINGS

Part No.	Description
HI-FLO SPC-2 VP	
4-65-WW411-4000VAC	1-1/2"Sx1-1/2"Spg 90˚Ell
4-65-WW642-4120VAC	1-1/2"Sx1-1/2"S 90˚Ell
4-65-WW642-4140VAC	2.0"SX2.0"S Suction Tee (limited to qty on hand)
2-1/2" SUPER HI-FLO SPC-3 VP	
4-65-WW413-2330V	2.0"SX2.0"S Suction Tee (limited to qty on hand)
4-65-WW642-3610V	2-1/2"S 90˚Ell
4-65-WW642-3700V	2.0"S 90˚Ell
4-65-WW642-3680V	2.0"S Straight

413-2330V

642-3680V

411-4000VAC

642-4120VAC

640-3610V

642-3700V

SUCTION VENT

Part No.	Description
4-65-WW640-3750V	Vacuum break, 3/4"SB

*** For Use with Vacuum Break Fittings ***

640-3750V

©2018

FLOOR DRAIN - WATERWAY

LO-PRO **REQUIRES 2-3/8" HOLE**

Part No.	Description
4-65-WW640-0407	Grey, 3/4"s / 1.0"spg
4-65-WW640-4250	White, 1-1/2" Slip
4-65-WW640-4257	Grey, 1-1/2" Slip
4-65-WW640-4340	Floor Drain - 3/4"s, White
4-65-WW640-4341	Floor Drain - 3/4"s, Black
4-65-WW640-4347	Floor Drain - 3/4"s, Grey
4-65-WW643-4250	Cover - White
4-65-WW643-4257	Cover - Grey

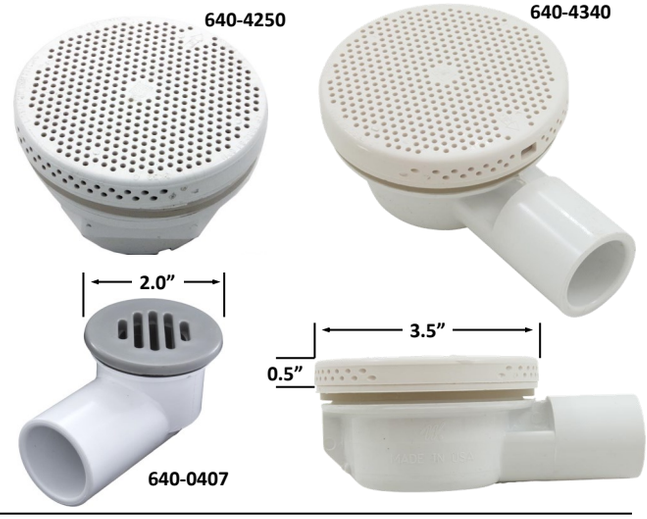

UNIONS

SPLIT NUT

Part No.	Description
	FOR PUMP TAILPIECES
4-60-MA0121109015	1.5" Small Flange
4-60-MA0121109020	2.0" Small Flange
4-60-MA0121109025	2.5" Small Flange
	FOR HEATER MANIFOLDS
4-60-WW400-5491	1.5" Standard Flange
4-60-WW400-5421	2.0" Standard Flange
4-60-MA0121108025	2.5" Standard Flange

Small Inner Flange Fits Pump Union Tailpieces

TECH - HOW TO SELECT THE CORRECT SIZE NUT

With the two halves of the split nut assembled, measure ID (Internal Dimension) of the inner flange on the threaded side:

ID 2-7/16" = 1-1/2" nut
ID 3-1/16" = 2" nut
ID 3-11/16" = 2-1/2" nut

©2018

UNIONS

PUMP UNION

Part No.	Description
4-60-WW400-1940	1.0 x 3/4b tail
4-60-WW400-1970	1.0 x 1.0b tail
4-60-WW400-1990	1.0 x 1.0s
4-60-WW400-4060	1.5 x 1.5s
4-60-WW400-4240	1.5 x 1.5spg
4-60-WW400-5570	2.0 x 2.0s Waterway
4-60-PEN2614029	2.0 x 2.0s Pentair
4-60-WW400-5680	2.0 x 2.0spg(1.5s)
4-60-WW400-5990	2.5 x 2.0s
4-60-WW400-6010	2.5 x 2.5s
4-60-WW400-4630	3.0 X 3.0s

UNION TAILPIECE

Part No.	Description
4-60-STAU11-183PM	1.5 socket Sta-Rite
4-60-WW417-4000	1.5 socket
4-60-WW417-5120	2.0 socket
4-60-WW417-4100	1.5 spigot
4-60-WW417-5020	2.0 spigot
4-60-WW417-4070	1.5 flange x 1.5fpt
4-60-WW417-5090	2.0 flange x 1.5mpt
4-60-WW417-5130	2.0 flange x 1.5fpt

Sta-Rite

UNION NUT

Part No.	Description
4-60-STAU11-182PM	1.5" Sta-Rite
4-60-WW415-4000	1.5"
4-60-WW415-5000	2.0"
4-60-WW415-6000	2.5"

Sta-Rite FINE thread

UNION ASSEMBLIES

Part No.	Description
4-60-WW400-3090	1.5s self aligning
4-60-WW400-5050	2.0s union assy
4-60-WW400-5090	2.0s self aligning
4-60-WW400-4480	2.0s/2.0spg swivel
4-60-WW400-6000	2.5s union assy
4-60-JA31150303	1.5s/2.0spg Jacuzzi
4-60-PR150100	1.5s Praher
4-60-PR200100	2.0s Praher

400-3090

400-5050

400-5090

400-4480

Jacuzzi Swivel Union

PUMP UNION SWEEP ELL

Part No.	Description
4-60-WW400-4300	2.0spg 45° sweep
4-60-WW400-5800	2.0s 90° sweep

400-4300

400-5800

©2018

Vous ne trouvez pas ce dont vous cherchez?
Contactez nous...et nous ferons notre mieux de le trouver pour vous!

BUTTRESSES, ADAPTERS, O-RINGS & GASKETS

BUTTRESSES / ADAPTERS

Part No.	Description
4-60-WW417-2010	1.0 buttress x 1.0 s
4-60-WW417-4090	1.5 buttress x 1.5 s
4-60-WW417-4050	1.5 buttress x 1.5 spg
4-60-WW417-5080	1.5 buttress x 2.0 spg
4-60-WW417-2090	2.0 buttress x 1.5 s
4-60-WW417-5050	2.0 buttress x 2.0 s
4-60-WW417-5070	2.0 buttress x 2.0 spg(1.5s)
4-60-WW417-5060	2.0 buttress thread x 2.0 spg
4-60-WW417-6010	2.5 buttress x 2.5 s (union)
4-60-WW417-5980	2.5 buttress x 2.5 s (heater)
4-60-WW417-4120	1.5 buttress x 1.5 mpt (union)
4-60-WW417-5140	2.0 buttress x 2.0 mpt
4-60-WW417-5180	2.0 buttress x 1.0spg(3/4s)
4-60-WW417-4060	1.5mpt buttress x 1.5 mpt tail
4-60-WW415-6010	2.0 x 2.5 Union Adapter
4-60-GEC5010013	1.5 x 2.0 Union Adapter
4-60-HAY400-4080	Hayward Pump Union Adapter
1-HQ42-2392-K	3.0 buttress x 90° 1.0 s
1-HQ42-2373-K	3.0 buttress x 2.0 s

4-60-GEC5010013

Converts 1.5" Pump Inlet or Outlet to 2"

415-6010

Converts 2" Pump Inlet or Outlet to 2.5"

400-4080

Converts 1.5" Standard Union Thread to Larger Hayward FINE Union Thread

42-2392-K (86-02392)

42-2373-K (86-02373)

417-5180

417-4060

417-5060

417-6010

417-2010

417-5140

O-RINGS, GASKETS, O-RING/GASKETS

Part No.	Description
4-60-WW805-0123	1.0 o-ring union
4-60-WW805-0224	1.5 o-ring heater
4-60-WW805-0226	1.5 o-ring union
4-60-WW805-0145	2.0 o-ring union
4-60-WW805-0229	2.0 o-ring pump union
4-60-WW805-0143	2.0 o-ring diverter body/cap
4-60-WW805-0232-R	2.5 o-ring pump
4-60-WW711-4000	1.5 gasket heater
4-60-WW711-4010	2.0 gasket union
4-60-WW711-4020	2.0 gasket - 1/4" thick
4-60-WW711-3250	2.5 gasket
4-60-WW711-4050	1.5 o-ring/gasket heater
4-60-WW711-4030	2.0 o-ring/gasket heater
4-60-WW711-6020	2.5 o-ring/gasket heater
4-60-THP44-02340	3.0 o-ring/gasket heater

O-RING

GASKET

O-RING/GASKET

LUBRICANTS

Seal Install Lube - p. 110

Part No.	Description
4-65-LT00150	Silicone w/PTFE (Teflon) 1oz
4-65-AL630	Magic Lube, PTFE, 1 oz
4-65-AL631	Magic Lube, PTFE, 5 oz
4-65-AL650	Magic Lube II, silicone, 1 oz
4-65-AL651	Magic Lube II, silicone, 5 oz
4-65-PenR172036	Silicone Lube, 3/4oz

R172036

LT00150

©2018

Can't find what you're looking for? Contact us...we'll try our best to find it for you!

Waterway **Wet Ends** - p.106

PUMPS - WATERWAY 48FR & 56FR

CENTER DISCHARGE

e-series

(replaces previous version of CD pump)

48 FRAME 2-SPEED

Part No.	Volts	AMPS Hi	AMPS Lo	Description
4-10-WW3420410-15	120	11.0	2.9	1.0HP, 1.5"in/out
4-10-WW3420610-15	120	16.4	4.4	1.5HP, 1.5"in/out
4-10-WW3420620-15	230	8.0	2.6	1.5HP, 1.5"in/out
4-10-WW3420820-15	230	10.5	2.6	2.0HP, 1.5"in/out

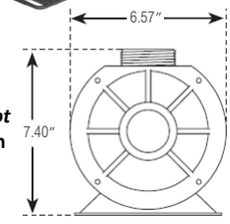

TECH NOTE

New e-series CD wet-end parts are *not* interchangeable with previous CD version wet-end parts

EXECUTIVE 48

48 FRAME 2-SPEED

Part No.	Volts	AMPS Hi	AMPS Lo	Description
4-10-WW3420410-1A	120	11.0	2.9	1.0HP, 2.0"in/out
4-10-WW3420610-1A	120	13.8	4.7	1.5HP, 2.0"in/out
4-10-WW3420620-1A	240	8.0	2.6	1.5HP, 2.0"in/out
4-10-WW3420820-1A	240	10.5	2.6	2.0HP, 2.0"in/out
4-10-WW3421221-1A	240	8.5	2.8	3.0HP, 2.0"in/out
4-10-WW3421221-13	240	8.5	2.8	3.0HP, 2.5"in/2.0"out
4-10-WW3421821-1A	240	12.0	3.5	4.5HP, 2.0"in/out
4-10-WW3421821-13	240	12.0	3.5	4.5HP, 2.5"in/2.0"out

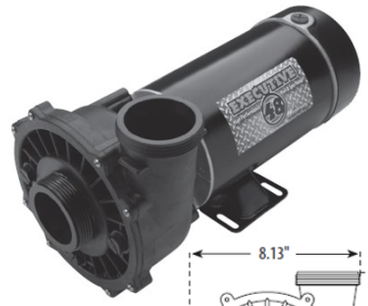

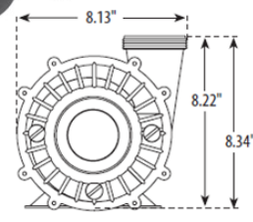

EXECUTIVE 56

56 FRAME 2-SPEED

Part No.	Volts	AMPS Hi	AMPS Lo	Description
4-10-WW3720821-1D	240	8.0	3.0	2.0HP, 2.0"in/out
4-10-WW3720821-13	240	8.0	3.0	2.0HP, 2.5"in/2.0"out
4-10-WW3721221-1D	240	10.0	3.4	3.0HP, 2.0"in/out
4-10-WW3721221-13	240	10.0	3.4	3.0HP, 2.5"in/2.0"out
4-10-WW3721621-1D	240	12.0	4.4	4.0HP, 2.0"in/out
4-10-WW3721621-13	240	12.0	4.4	4.0HP, 2.5"in/2.0"out
4-10-WW3722021-1D	240	16.4	4.8	5.0HP, 2.0"in/out
4-10-WW3722021-13	240	16.4	4.8	5.0HP, 2.5"in/2.0"out

56 FRAME 1-SPEED

Part No.	Volts	AMPS Hi	AMPS Lo	Description
4-10-WW3710821-1D	240	8.0	n/a	2.0HP, 2.0"in/out
4-10-WW3711221-1D	240	10.0	n/a	3.0HP, 2.0"in/out
4-10-WW3711221-13	240	10.0	n/a	3.0HP, 2.5"in/2.0"out
4-10-WW3711621-1D	240	12.0	n/a	4.0HP, 2.0"in/out
4-10-WW3711621-13	240	12.0	n/a	4.0HP, 2.5"in/2.0"out
4-10-WW3712021-1D	240	16.4	n/a	5.0HP, 2.0"in/out
4-10-WW3712021-13	240	16.4	n/a	5.0HP, 2.5"in/2.0"out

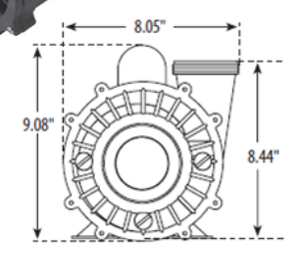

- pump amperages shown may vary -

ELM Dealer Portal 24/7/365
placez vos commandes • vérifiez la disponibilité du stock • les listes de plupart des produits est mise à jour
p: 905.670.5387 f: 905.670.5389 t: 888.502.6960 info@elmsalesandequipment.com
- les prix sur le Portail des Revendeurs d'ELM supplanteront tous les autres prix -
©2018
ELM Engineering Logistics Marketing®

Vous ne trouvez pas ce dont vous cherchez?
Contactez nous...et nous ferons notre mieux de le trouver pour vous!

PUMPS - WATERWAY 48FR & 56FR

Waterway **Wet Ends** - p.106

WATERWAY - VIPER

56 FRAME 2-SPEED

Part No.	Volts	AMPS Hi	AMPS Lo	Description
4-10-WW3721221-1V	240	10.0	3.5	3.0HP, 2.5”in/2.5”out
4-10-WW3721621-1T	240	12.0	4.4	4.0HP, 2.5”in/2.5”out
4-10-WW3722021-0V	240	16.4	4.8	5.0HP, 2.5”in/2.5”out

The Viper can be used to Retro-Fit the Aqua-Flo Flo-Master XP3

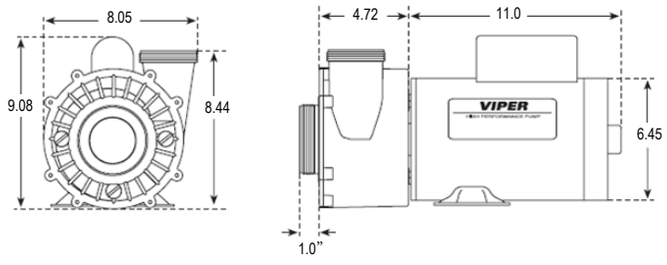

2-1/2” Intake and 2-1/2” Discharge

WATERWAY - EX2

48 FRAME 2-SPEED

Part No.	Volts	AMPS Hi	AMPS Lo	Description
4-10-WW3421021-1U	240	9.0	2.8	2.0HP, 2.0”in/2.0”out
4-10-WW3421020-1U*	240	11.0	3.3	2.5HP, 2.0”in/2.0”out
4-10-WW3421821-1U*	240	12.0	3.5	3.0HP, 2.0”in/2.0”out

* Up-rated pumps: 2.5HP labelled 3.0HP / 3.0HP labelled 4.0HP

56 FRAME 2-SPEED

Part No.	Volts	AMPS Hi	AMPS Lo	Description
4-10-WW3720821-1W	240	8.0	3.0	2.0HP, 2.0”in/2.0”out
4-10-WW3721621-1W	240	12.0	4.4	3.0HP, 2.0”in/2.0”out

2.0” Intake and 2.0” Discharge

the EX2 can be used to retro-fit the Aqua-Flo Flo-Master XP2 & XP2E

same physical size as the Aqua-Flo XP2 and XP2E

can be used to retrofit Aqua-Flo model XP2 or XP2E pumps and similar import pump models

- pump amperages shown may vary -

©2018

PUMPS - ULTRA JET / STA-RITE / PENTAIR

ULTIMA (ULTRA JET REPLACEMENTS) 48 FRAME 2-SPEED

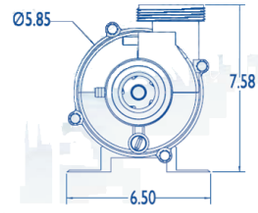

Part No.	Volts	AMPS Hi	AMPS Lo	Description
4-10-PEN1014013	120	13.5	4.7	1.0HP, 1.5" in/out
4-10-PEN1014014	120	13.5	4.7	1.5HP, 1.5" in/out
4-10-PEN1014054	120	13.5	4.7	1.5HP, 2.0" in/out
4-10-PEN1014347	240	10.5	2.6	1.5HP, 2.0" in/out
4-10-PEN1014057	240	10.7	3.0	2.0HP, 2.0" in/out
4-10-PEN1014058	240	12.0	3.7	3.0HP, 2.0" in/out
4-10-PEN1014059	240	12.0	3.5	4.0HP, 2.0" in/out

4-60-HT53S heat jacket

DURA JET (STA-RITE REPLACEMENTS) 48 FRAME 2-SPEED

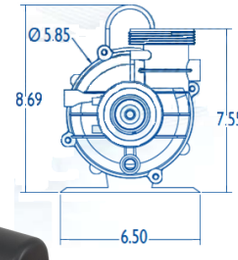

Part No.	Volts	AMPS Hi	AMPS Lo	Description
4-10-PenDJAYEA-0002*	120	10.5	3.6	1.0HP, 2.0" in/out
4-10-PenDJAYFA-0001*	120	13.0	3.7	1.5HP, 2.0" in/out
4-10-PenDJAYGB-0001	240	8.5	3.0	2.0HP, 2.0" in/out
4-10-PenDJAAYGB-0001*	240	10.7	3.0	2.5HP, 2.0" in/out
4-10-PenDJAYHB-0003	240	12.0	3.7	3.0HP, 2.0" in/out

*** Discontinued—Ltd Qty available**

ULTIMAX (ULTRA JET/PENTAIR REPLACEMENTS) 56 FRAME 2-SPEED

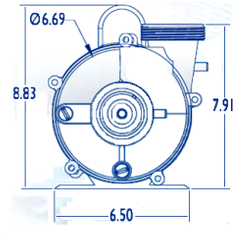

Part No.	Volts	AMPS Hi	AMPS Lo	Description
4-10-PEN1016012	240	8.0	3.0	2.0HP, 2.0" in/out
4-10-PEN1016016	240	10.0	1.8	3.0HP, 2.0" in/out
4-10-PEN1016186	240	12.0	3.0	4.0HP, 2.0" in/out

Ultra Jet/Sta-Rite/Pentair Wet Ends - p.107

- pump amperages shown may vary -

©2018

ELM Engineering Logistics Marketing®

PUMPS - GALAXY 48FR & 56FR

Designed, Engineered & Manufactured in the USA
with quality *VITON* ***U.S. SEALS*** and ***CENTURY*** motors!

VENUS SERIES 48FR

48 FRAME 2-SPEED

Part No.	Volts	AMPS Hi	AMPS Lo	Description
4-10-GPM-V4101*	115	10.0	2.8	1.0HP, 1.5”in/out
4-10-GPM-V4151*	115	13.5	4.7	1.5HP, 1.5”in/out
4-10-GPM-V4202*	230	10.5	2.6	2.0HP, 1.5”in/out

SATURN SERIES 48FR

48 FRAME 2-SPEED

Part No.	Volts	AMPS Hi	AMPS Lo	Description
4-10-GPM-S4101	115	10.0	2.8	1.0HP, 2.0”in/out
4-10-GPM-S4151	115	13.5	4.7	1.5HP, 2.0”in/out
4-10-GPM-S4202	230	10.5	2.6	2.0HP, 2.0”in/out
4-10-GPM-S4302	230	8.5	2.8	3.0HP, 2.0”in/out
4-10-GPM-S4402	230	12.0	3.5	4.0HP, 2.0”in/out

SATURN SERIES 56FR

56 FRAME 2-SPEED

Part No.	Volts	AMPS Hi	AMPS Lo	Description
4-10-GPM-S5302	230	10.0	1.8	3.0HP, 2.0”in/out
4-10-GPM-S5402	230	12.0	3.0	4.0HP, 2.0”in/out
4-10-GPM-S5502*	230	16.4	4.8	5.0HP, 2.0”in/out

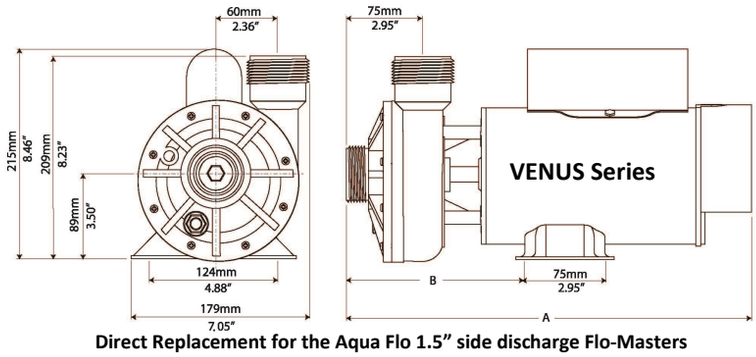

Direct Replacement for the Aqua Flo 1.5” side discharge Flo-Masters

Model No.	B	A
V4101	6.70”(170mm)	14.91”(379mm)
V4151	6.70”(170mm)	15.66”(423mm)
V4202	6.70”(170mm)	16.16”(410mm)

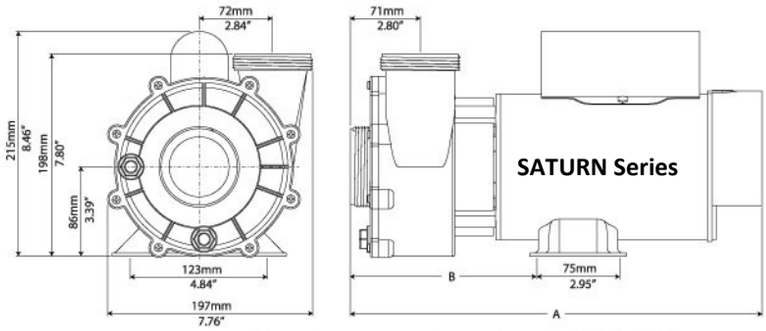

Direct Replacement for the Aqua Flo XP2 & XP2E

Pump Seals

PS-200 Viton: Saturn series
PS-201 Viton: Venus series

Model No.	B	A
S4101	7.05”(179mm)	15.26”(387.60mm)
S4151	7.05”(179mm)	16.01”(406.65mm)
S4202	7.05”(179mm)	16.51”(419.35mm)
S4302	7.05”(179mm)	16.51”(419.35mm)
S4402	8.58”(218mm)	17.51”(444.75mm)
S5302	7.05”(179mm)	15.92”(404.37mm)
S5402	7.05”(179mm)	16.67”(423.42mm)
S5502	7.05”(179mm)	16.55”(420.37mm)

*** Discontinued. Limited QTY Available.**

ELM Dealer Portal 24/7/365
place orders • check available stock • most up-to-date product listings
p: 905.670.5387 f: 905.670.5389 t: 888.502.6960 info@elmsalesandequipment.com
- prices on ELM Dealer Portal supersede all other prices -
©2018

PUMPS - CIRCULATION

TINY MIGHT - Waterway

Part No.	Volts	AMPS Hi	AMPS Lo	Description
4-10-WW3312610-14	120	n/a	0.8	1/16HP, 1.0” in/out
4-10-WW3312620-14	240	n/a	0.4	1/16HP, 1.0” in/out

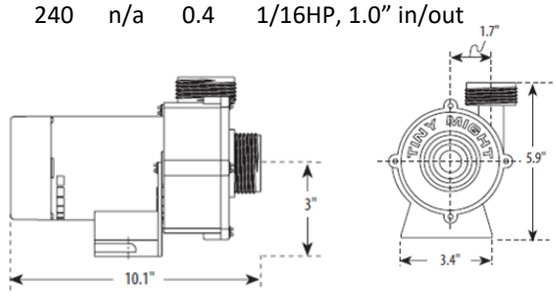

IRON MIGHT - Waterway

1.5” in/out

Part No.	Volts	AMPS Hi	AMPS Lo	Replaces
SIDE DISCHARGE				
4-10-WW3410030-1E	120	N/A	1.3	WW3410030-1E
4-10-WW3410020-1E	240	N/A	0.8	WW3410020-1E
CENTER DISCHARGE				
4-10-WW3410030-15	120	N/A	1.3	WW3410030-15
4-10-WW3410020-15	240	N/A	0.8	WW3410020-15

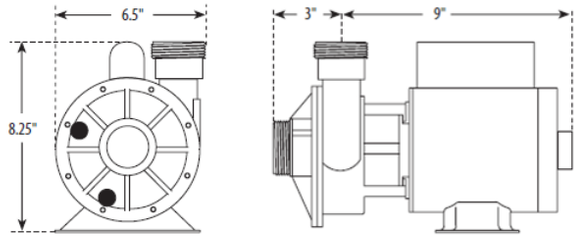

Replaces Aqua-Flo Circ-Master CMHP & CMCP and VICO circ pumps

GRUNDFOS

Part No.	Volts	Amps	Description
4-10-GRU59896291	115V	0.74	1.0”b x 1.0”b
4-10-GRU59896292	230V	0.50	1.0”b x 1.0”b

- pump amperages shown may vary -

©2018

PUMPS - CIRCULATION

LAING / ITT

Part No.	OE#	Volts	Description
E5			
4-10-LA100102	LMB08102989	115/230V	3/4"b x 3/4"b
E10			
4-10-LA73989	6050U0015	115V	3/4"b x 3/4"b
4-10-LA73979	6050U0016	230V	3/4"b x 3/4"b
4-10-LA74009	6050U0013	115V	3/4"mpt x 3/4"mpt
4-10-LA73999	6050U0014	230V	3/4"mpt x 3/4"mpt
4-10-LA74069	6050U0011	115V	1.0"b x 1.0"b
4-10-LA74079	6050U0010	230V	1.0"b x 1.0"b
E14			
4-10-LA73348	LMB07102983	230V	1.5" x 1.5" buttress

E5

E10

E14

PUMPS - BATH

Non-stock Special Order: 5 - 8 day lead-time

GENESIS

Standard 1-1/2" inlet/outlet; air switch & Nema cord included

Part No.	HP	Volts/Amps	Length	Width	Overall Ht.	Outlet Ht.
4-10-WW321FF10	1/2	120V / 5.5A	10.78"	5.125"	6.875"	7.10"
4-10-WW321HF10	3/4	120V / 7.5A	11.72"	5.125"	6.875"	6.69"
4-10-WW321JF10	1.0	120V / 9.5A	12.82"	5.125"	7.79"	7.79"

WOW

Standard 1-1/2" inlet/outlet; air switch & Nema cord included

4-10-PEN1050031	3/4	120V / 5.5A	13.50"	4.85"	7.20"	6.70"
4-10-PEN1051057	1.0	120V / 9.7A	13.22	4.85"	8.80"	7.31"

TIMERS - BATH PUMP

4-10-LG910800-001 TF-1, stand-alone on/off control, no time-out
4-10-LG910820-001 TF-1TD, stand-alone on/off control, 10 minute time-out

- pump amperages shown may vary -

©2018

Vous ne trouvez pas ce dont vous cherchez?
Contactez nous...et nous ferons notre mieux de le trouver pour vous!

Waterway Pumps - p.100-101

WET ENDS - WATERWAY

TINY MIGHT 1" SUCTION/DISCHARGE

Part No.	RATED
4-60-WW310-9000	1/16hp

IRON MIGHT II 1.5" SUCTION/DISCHARGE
(Replaces WW310-1000)

Part No.	RATED
4-60-WW310-7890	1/8hp

CENTER DISCHARGE E-SERIES (6-screw fp)
1.5" SUCTION
1.5" DISCHARGE

Part No.	Same As	Motor Fit	RATED
4-60-WW310-8210	310-1120	48FR	3/4HP
4-60-WW310-8220	310-1130E	48FR	1.0HP
4-60-WW310-8230	310-1140E	48FR	1.5HP
4-60-WW310-8240	310-1141E	48FR	2.0HP

CENTER DISCHARGE* (4-screw faceplate)

4-60-WW310-1130		48FR	1.0HP
4-60-WW310-1140		48FR	1.5HP
4-60-WW310-1141		48FR	2.0HP

* **Complete wet ends are discontinued and limited to qty on hand. All parts are still available.**

HI-FLO SIDE DISCHARGE
2.0" SUCTION
2.0" DISCHARGE

4-60-WW310-1140SD	48FR	1.5HP
4-60-WW310-1141SD	48FR	2.0HP
4-60-WW310-1150SD	48FR	3.0HP
4-60-WW310-1160SD	48FR	4.0HP

EXECUTIVE
2.0" SUCTION
2.0" DISCHARGE

4-60-WW310-1870	48FR	1.0HP
4-60-WW310-1880	48FR	1.5HP
4-60-WW310-1890	48FR	2.0HP
4-60-WW310-1900	48FR	3.0HP
4-60-WW310-1910	48FR	4.0HP
4-60-WW310-1920	48FR	4.5HP
4-60-WW310-1720	56FR	2.0HP
4-60-WW310-1730	56FR	3.0HP
4-60-WW310-1740	56FR	4.0HP
4-60-WW310-1750	56FR	5.0HP

EXECUTIVE
2.5" SUCTION
2.0" DISCHARGE

4-60-WW310-1820	48FR	2.0HP
4-60-WW310-1840	48FR	3.0HP
4-60-WW310-1860	48FR	4.0HP
4-60-WW310-1850	48FR	4.5HP
4-60-WW310-1830	48FR	5.0HP
4-60-WW310-1480	56FR	2.0HP
4-60-WW310-1500	56FR	3.0HP
4-60-WW310-1440	56FR	4.0HP
4-60-WW310-1510	56FR	5.0HP

EX2
2.0" SUCTION
2.0" DISCHARGE

4-60-WW310-2450	48FR	1.5HP
4-60-WW310-2460	48FR	2.0HP
4-60-WW310-2480	48FR	3.0HP
4-60-WW310-2370	56FR	2.0HP
4-60-WW310-2380	56FR	3.0HP

VIPER
2.5" SUCTION
2.5" DISCHARGE

4-60-WW310-0170	56FR	3.0HP
4-60-WW310-0140	56FR	4.0HP
4-60-WW310-0180	56FR	5.0HP

©2018

WET ENDS - ULTRA JET/STA-RITE/PENTAIR

ULTIMA (ULTRA JET)

Ultra Jet/Sta-Rite/Pentair Pumps - p.102

Part No.	Motor Fit	RATED	Suction/Discharge
4-60-UJV1215156	48FR	3/4HP	1.5" / 1.5" side
4-60-UJV1215158	48FR	3/4HP	1.5" / 1.5" center
4-60-UJV1215116	48FR	1.0HP	1.5" / 1.5" side
4-60-UJV1215119	48FR	1.0HP	1.5" / 1.5" center
4-60-UJV1215128	48FR	1.5HP	1.5" / 1.5" center
4-60-UJV1215121	48FR	1.5HP	1.5" / 1.5" side
4-60-UJV1215123	48FR	1.5HP	2.0" / 2.0" side
4-60-UJV1215135	48FR	2.0HP	1.5" / 1.5" center
4-60-UJV1215132	48FR	2.0HP	2.0" / 2.0" side
4-60-UJV1215145	48FR	3.0HP	2.0" / 2.0" side
4-60-UJV1215161	48FR	4.0HP	2.0" / 2.0" side

TECH NOTE 3HP & 4HP Wet Ends have a WIDE Front Volute
See p.113 for details

TECH NOTE Most of the Ultra Jet 48FR pumps are uprated. Always check your impeller dimension before ordering.

1.5" Suction
1.5" Center Discharge

1.5" Suction
1.5" Side Discharge

2.0" Suction
2.0" Side Discharge

DURA JET (STA-RITE) 2.0" SUCTION/DISCHARGE

Part No.	Motor Fit	RATED
4-60-STA1215014	48FR	2.0HP
4-60-STA1215015	48FR	3.0HP

TECH NOTE When Replacing the Wet End on a 2-spd Dura Jet Pump Use:
- 2.0HP Wet End for 3.0HP 2-spd (Uprated)
- 3.0HP Wet End for 4.0HP 2-spd (Uprated)

ULTIMAX (ULTRA JET/PENTAIR) 2.0" SUCTION/DISCHARGE

Part No.	Motor Fit	RATED
4-60-UJV1215160	48FR / 56FR	1.5HP
4-60-UJV1215185	48FR / 56FR	2.0HP
4-60-UJV1215186	48FR / 56FR	3.0HP
4-60-UJV1215007	48FR / 56FR	4.0HP

TECH NOTE Ultimax wet ends: it may be necessary to remove the slinger from the motor shaft and/or shorten the impeller shaft for proper fitment.

©2018

More **Waterway Pump Parts** - p.111-112

PUMP PARTS - IMPELLERS

IMPELLERS - WATERWAY

Part No.	Description	Pump Rating	Motor Frame Size
4-60-WW310-0900	Iron Might (pre 2012)	1/8HP	48FR
Center Discharge 2010 & Earlier			
4-60-WW310-5120	Center Discharge	3/4HP	48FR
4-60-WW310-5130	Center Discharge	1.0HP	48FR
4-60-WW310-5140	Center Discharge	1.5HP	48FR
4-60-WW310-5200	Center Discharge	2.0HP	48FR
Center Discharge 2011 +			
4-60-WW310-8010	CD / Iron Might II (CD)	3/4HP	48FR
4-60-WW310-8020	CD / Iron Might II (SD)	1.0HP	48FR
4-60-WW310-8030	Center Discharge	1.5HP	48FR
4-60-WW310-8040	Center Discharge	2.0HP	48FR
4-60-WW310-3990	Hi-Flo SD	3/4HP	48FR
4-60-WW310-4000	Hi-Flo SD	1.0HP	48FR
4-60-WW310-4010	Hi-Flo SD	1.5HP	48FR
4-60-WW310-4030	Hi-Flo SD	2.0HP	48FR
4-60-WW310-4020	Hi-Flo SD	3.0HP	48FR
4-60-WW310-4050	Hi-Flo SD	4.0HP	48FR
4-60-WW310-4230	Exec 48 (3/4HP imp.)	1.0HP	48FR
4-60-WW310-4220	Exec 48 (1.0HP imp.)	1.5HP	48FR
4-60-WW310-4210	Exec 48 (2.0HP imp.)	2.0HP	48FR
4-60-WW310-4210	Exec 48 (2.0HP imp.)	3.0HP	48FR
4-60-WW310-4200	Exec 48 (3.0HP imp.)	4.0HP/4.5HP	48FR
4-60-WW310-4220	Exec 56	1.0HP	56FR
4-60-WW310-4210	Exec 56	2.0HP	56FR
4-60-WW310-4200	Exec 56	3.0HP	56FR
4-60-WW310-4190	Exec 56	4.0HP	56FR
4-60-WW310-4180	Exec 56	5.0HP	56FR
4-60-WW310-2330	EX2	1.5HP	48/56FR
4-60-WW310-2340	EX2	2.0HP	48/56FR
4-60-WW310-2300	EX2	2.5HP	56FR
4-60-WW310-2350	EX2	3.0HP	48/56FR
4-60-WW310-2260	Viper	2.0HP	NLA
4-60-WW310-2270	Viper	3.0HP	56FR
4-60-WW310-2200	Viper	4.0HP	56FR
4-60-WW310-2620	Viper (replaces 310-2280)	5.0HP	56FR
4-60-WW310-2440	Coast 'Big Red'	7.0HP	56FR

TECH NOTE Waterway EXEC 48FR pumps are uprated. Before ordering always confirm the impeller HP stamped on the inside front face of impeller.

TECH NOTE Waterway redesigned the EXEC series impellers in 2015. The latest style impellers are compatible with existing EXEC wet ends.

©2018

PUMP PARTS - IMPELLERS

More **Ultra Jet/Sta-Rite/Pentair Pump Parts** - p.113-114

IMPELLERS - ULTRA JET/STA-RITE/PENTAIR

TECH NOTE Most of the Ultra Jet 48FR pumps are uprated. Always check the impeller dimension before ordering.

Part No.	Description	Pump Rating	Motor Frame Size
4-60-UJV1212207	Ultima (grey)	3/4HP	48FR
4-60-UJV1212205	Ultima (black)	1.0HP	48FR
4-60-UJV1212215	Ultima (red/green)	1.5HP	48FR
4-60-UJV1212218	Ultima (red)	2.0HP	48FR
4-60-UJV1212225	Ultima (red/black)	3.0HP	48FR
4-60-UJV1212221	Ultima (black/green/red)	4.0HP	48FR
4-60-UJV1212219	Ultima (orange/red)-CAL SPA	5.0HP	48FR
4-60-STA17400-0120	Dura Jet - DJ	1.0HP	48FR
4-60-STA17400-0121	Dura Jet - DJ	1.5HP[1]	48FR
4-60-STA17400-0122	Dura Jet - DJ	2.0HP	48FR
4-60-STA17400-0123	Dura Jet - DJ	2.5HP[2]	48FR
4-60-STAC105228P*	Dura Jet - JS *Discontinued* limited to qty on hand	1.0HP	48FR
4-60-STA17301-0101*	Dura Jet - JS	1.5HP	48FR
4-60-UJV1212230	Ultimax (green/brown/red)	2.0HP	56FR
4-60-UJV1212235	Ultimax (green/orange/red)	3.0HP	56FR
4-60-UJV1212243	Use 4-60-UJV1212235	3.0HP	56FR
4-60-UJV1212008	Ultimax (grn/org/red/brown)	4.0HP	56FR

TECH NOTE Dura Jet 2-spd pumps are uprated:
[1] 1.5HP used for 3HP 2-spd / [2] 2.5HP used for 4HP 2-spd

TECH NOTE 4-60-UJV1212230/235: it may be necessary to remove the slinger from the motor shaft and/or shorten the impeller shaft for proper fitment.

IMPELLERS - AQUA-FLO

More **Aqua-Flo Pump Parts** - p.115-116

Part No.	Description	Pump Rating	Motor Frame Size
4-60-AF91693501	FMHP / FMCP	1/2HP	48FR
4-60-AF91693551	FMHP / FMCP	3/4HP	48FR
4-60-AF91693601	FMHP / FMCP	1.0HP	48FR
4-60-AF91693651	FMHP / FMCP	1.5HP	48FR
4-60-AF91693701	FMHP / FMCP	2.0HP	48FR
4-60-AF91694110	XP / XP2	1.0HP	48/56FR
4-60-AF91694150	XP / XP2	1.5HP	48/56FR
4-60-AF91694200	XP / XP2	2.0HP	48/56FR
4-60-AF91694251	XP / XP2	2.5HP	48/56FR
4-60-AF91694300	XP / XP2	3.0HP	48/56FR
4-60-AF91694400	XP / XP2	4.0HP	48/56FR
4-60-AF91695150	XP2E	1.5HP	48/56FR
4-60-AF91695200	XP2E	2.0HP	48/56FR
4-60-AF91695250	XP2E	2.5HP	48/56FR
4-60-AF91695310	XP2E	3.0HP	48/56FR
4-60-AF91695401	XP2E	4.0HP	48/56FR
4-60-AF91698250	XP3	2.5HP	56FR
4-60-AF91698300	XP3	3.0HP	56FR
4-60-AF91698400	XP3	4.0HP	56FR

©2018

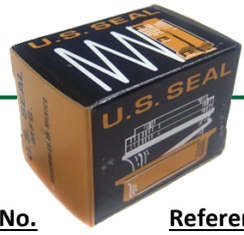

PUMP PARTS - SHAFT SEAL KITS

Motor Parts - p.117

GENERAL SERVICE APPLICATIONS

BUNA / GRAPHITIC PLASTIC, SS w/Ceramic Seat
Industry Standard

Item	Part No.	Reference	Shaft Size
	4-10-PS671	#671 (Tiny Might)	3/8”
1	4-10-PS100	#100	5/8”
2	4-10-PS200	#200	5/8”
3	4-10-PS201	#201	3/4”
4	4-10-PS1000	#1000	5/8”
- -	4-10-PS2131	Hayward	5/8”

SPA SERVICE APPLICATIONS

BUNA / CARBON GRAPHITE, SS w/Ceramic Seat
Better resistance to heat, abrasion and chemicals

1	4-10-PS4267	#100 B/C	5/8”
2	4-10-PS3960	#200 B/C	5/8”
3	4-10-PS4265	#201 B/C	3/4”
4	4-10-PS961	#1000 B/C	5/8”

OZONE/SALT SERVICE APPLICATIONS

VITON / CARBON GRAPHITE, SS w/Ceramic Seat
Applications with salt chlorine generators and/or ozone

1	4-10-PS3866	#100 Viton	5/8”
2	4-10-PS3867	#200 Viton	5/8”
3	4-10-PS3868	#201 Viton	3/4”
4	4-10-PS3865	#1000 Viton	5/8”

Other Seal styles available upon request

SEAL INSTALLATION LUBRICANT

Part No.	Description
4-65-LUBE10ML	SEALUBE, 10ml.
4-65-LUBE4OZ	SEALUBE, 4oz.

Water based lubricant specifically designed for shaft seal installation

Lubrifiant à base d'eau conçus spécifiquement pour l'installation de sceaux

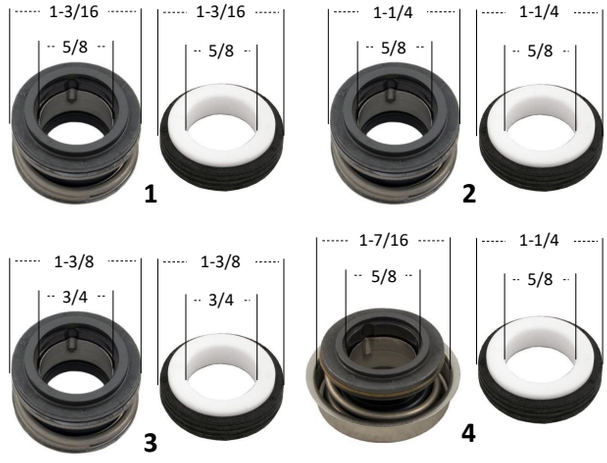

Dimensions may vary slightly

SEAL KIT APPLICATIONS - CROSS REFERENCE BY PUMP MANUFACTURER

Pump MFR.	Pump Model	Seal Kit
Aqua-Flo	XP2e, XP2, XP3, FMCP, FMHP, Tub-Master, Dominator pre ‘94	2
Hayward	Max-Flo, Super Pump, Super Pump II / Cast Iron	3
Jacuzzi	Cygnet, A-series, J & JCM-series, K & KM-series, LCM-series, LCU-series, LR-series, Vector (LVL)	2
	Magnum, RC-series	3
Pac-Fab	Challenger, Dynamite, Dynamo, Dynatron, Pinnacle	2
	Hydropump	3
Premier	120T-series, 225/255 MKII-series, 300-series, 725/756-series	3
Sta-rite	AJ-series, Dura-Glas pre ‘98, Max-E-Glas pre ‘98, PLBC series	1
	Dura-Glas, Max-E-Glas	2
	Dura-jet, Dyna-Glas, Dyna-Max, Dyna-jet, Dura-Glas II, Max-E-Glas II	3
Swim-Quip	XL, VI/XL, VII-series	3
Ultrajet/Vico	Ultima, Ultimax	3
Waterway	Hi-Flo Side Discharge, Center Discharge (pre 2010), Workman, Executive 48, Executive 56	4
	Center Discharge E-Series (2011+)	2

PLEASE NOTE: We have done our best to ensure the accuracy of this information, however it is ultimately the responsibility of the installer to identify and ensure proper seal kit application.

©2018

PUMP PARTS - WATERWAY

IRON MIGHT - 2012 & EARLIER

Item	Part No. (2012 & earlier)	Description	Part No. (2013 +)
1	4-60-WW315-1060	Volute 1.5" outlet	4-60-WW315-2510
2	4-10-PS3865	Shaft Seal - Viton	4-10-PS3867
	4-10-PS961	Shaft Seal - Car./Buna	4-10-PS3960
3	4-60-WW310-0900	Iron Might Impeller	4-60-WW310-8020
4	4-60-WW805-0248	O-Ring, volute	4-60-WW805-0158
5	4-60-WW311-1060	Faceplate 1.5" inlet	4-60-WW311-2160
6	4-60-WW819-1110	Screw #8-32 (*8 required*)	4-60-WW819-1110

IRON MIGHT II - 2013+

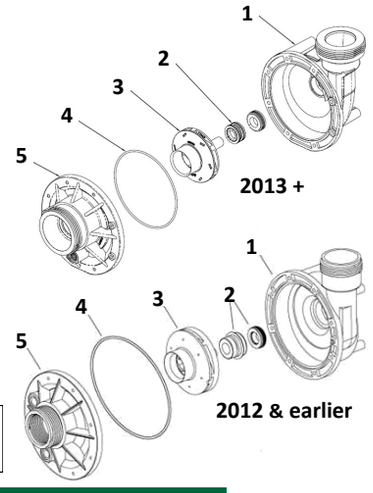

TECH NOTE There was overlap in the availability of the 'new-style' and 'old-style' Iron Might and Center Discharge series during the transition years. Pls. make sure you're ordering the correct parts!

CENTER DISCHARGE - early 4-screw faceplate

Item	Part No. (2010 & earlier)	Description	Part No. (2011 +)
1	4-60-WW715-1201	Drain Plug	4-60-WW715-1201
	4-60-WW805-0112	O-Ring, drain plug	4-60-WW805-0112
3	4-60-WW819-1110	Screw #8-32 x 7/16"	4-60-WW819-1110
4	4-60-WW311-1110	Faceplate 1.5" inlet	4-60-WW311-1070
5	4-60-WW805-0252	O-Ring, faceplate	4-60-WW805-0252
6	4-60-WW310-5120	3/4HP Impeller	4-60-WW310-8010
	4-60-WW310-5130	1.0HP Impeller	4-60-WW310-8020
	4-60-WW310-5140	1.5HP Impeller	4-60-WW310-8030
	4-60-WW310-5200	2.0HP Impeller	4-60-WW310-8040
7	4-10-PS3865	Shaft Seal - Viton	4-10-PS3867
	4-10-PS961	Shaft Seal - Car./Buna	4-10-PS3960
8	4-60-WW315-1120	Volute 1.5" outlet	4-60-WW315-1070
	4-60-WW313-1400	Slinger	4-60-WW313-1400

CENTER DISCHARGE - later 6-screw faceplate

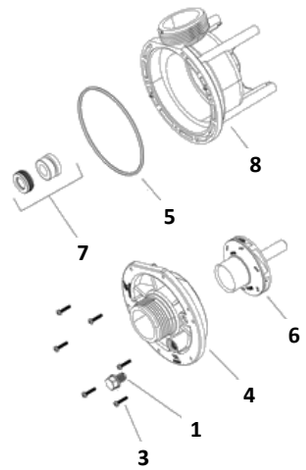

HI-FLO SIDE DISCHARGE

Item	Part No.	Description
1	4-60-WW715-1201	Drain Plug
2	4-60-WW805-0112	O-Ring, drain plug
3	4-60-WW819-1110	Screw #8-32 x 7/16"
4	4-60-WW311-2140	Faceplate, 2.0" inlet
5	4-60-WW805-0256	O-Ring, faceplate
6	4-60-WW319-1390	Wear Ring
7	4-60-WW310-4000	1.0HP "C" Impeller
	4-60-WW310-4010	1.5HP "D" Impeller
	4-60-WW310-4030	2.0HP Impeller
	4-60-WW310-4020	3.0HP Impeller
	4-60-WW310-4050	4.0HP Impeller
8	4-10-PS3865	Shaft Seal - Viton
	4-10-PS961	Shaft Seal - Car./Buna
9	4-60-WW315-2500	Volute 2.0" outlet
10	4-60-WW313-1400	Slinger

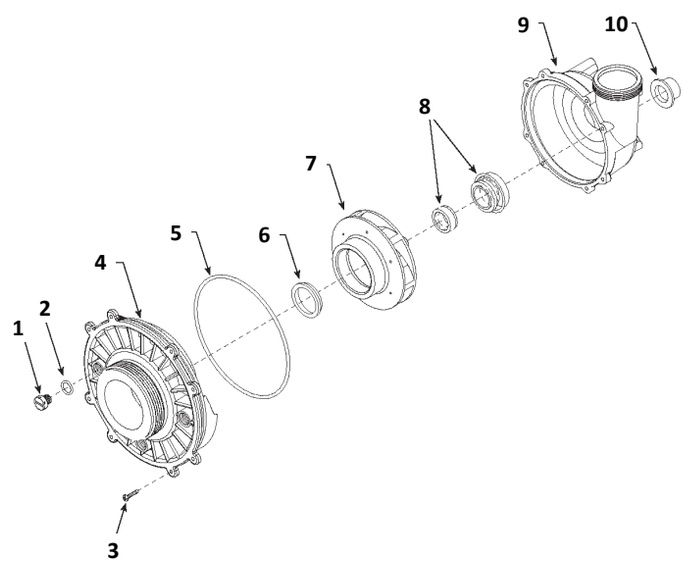

©2018

PUMP PARTS - WATERWAY

EXECUTIVE 48FR & 56FR

Item	Part No.	Description
1	4-60-WW715-1201	Drain Plug
2	4-60-WW805-0112	O-Ring, drain plug
3	4-60-WW819-1110	Screw #8-32 x 7/16”
4	4-60-WW311-1210	Faceplate, 2.5” inlet
	4-60-WW311-1220	Faceplate, 2.0” inlet
5	4-60-WW805-0261	O-Ring, faceplate
6	4-60-WW319-1370	Wear Ring, 4 and 5HP
	4-60-WW319-1380	Wear Ring, 3/4 to 3HP
7	56FR MOTOR IMPELLER	
	4-60-WW310-4220	1.0HP Impeller
	4-60-WW310-4210	2.0HP Impeller
	4-60-WW310-4200	3.0HP Impeller
	4-60-WW310-4190	4.0HP Impeller
	4-60-WW310-4180	5.0HP Impeller
7	48FR MOTOR IMPELLER	
	4-60-WW310-4230	1.0HP Mtr=3/4HP Imp.
	4-60-WW310-4220	1.5HP Mtr=1.0HP Imp.
	4-60-WW310-4220	2.0HP Mtr=2.0HP Imp.
	4-60-WW310-4210	3.0HP Mtr=2.0HP Imp.
	4-60-WW310-4200	4.0HP Mtr=3.0HP Imp.
8	4-10-PS3865	Shaft Seal - Viton
	4-10-PS961	Shaft Seal - Car./Buna
8a	4-60-WW805-0028	O-Ring, 2018 +
9	4-60-WW315-1220	Volute 56FR, 2.0” outlet
	4-60-WW315-1240	Volute 48FR, 2.0” outlet
10	4-60-WW313-1400	Slinger, plastic
	4-60-WW319-3960	Slinger, rubber washer

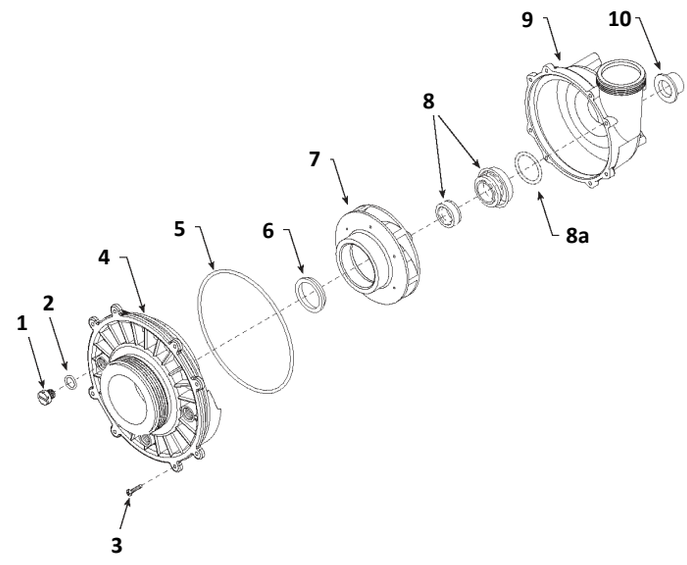

VIPER

Item	Part No.	Description
1	4-60-WW715-1201	Drain Plug
2	4-60-WW805-0112	O-Ring, drain plug
3	4-60-WW819-1110	Screw #8-32 x 7/16”
4	4-60-WW311-1510	Faceplate 2-1/2” inlet
5	4-60-WW805-0264	O-Ring, volute
6	4-60-WW313-3210	Wear Ring
7	4-60-WW310-2260	2.0HP Impeller
	4-60-WW310-2270	3.0HP Impeller
	4-60-WW310-2200	4.0HP Impeller
	4-60-WW310-2620*	5.0HP Impeller
8	4-10-PS3867	Shaft Seal - Viton
	4-10-PS3960	Shaft Seal - Car./Buna
9	4-60-WW315-1500	Volute 2-1/2” outlet

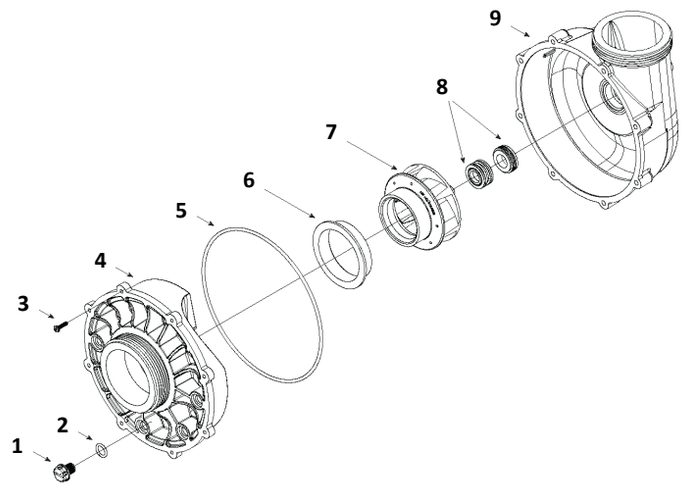

* replaces 310-2280

©2018

PUMP PARTS - ULTRA JET - ULTIMA SERIES

ULTIMA

Item	Part No.	Description
1	4-60-UJV1214138	Drain Plug
2	4-60-UJV1214136	O-Ring, drain plug
3	4-60-UJV1210017	Volute A - 1.5"in x 1.5"out
	4-60-UJV1210014	Volute B - 2.0"in x 2.0"out
	4-60-UJV1210036**	Volute C - 2.0"in x 2.0"out
	4-60-UJV1210013	Volute D - discontinued
	4-60-UJV1210016	Volute E - 1.5"in x 1.5"out
	4-60-UJV1210015	Volute F - 2.0"in x 1.5"out
	4-60-UJV1210010	Volute G - 1.5"in x 1.5"out
4	4-60-UJVPPUFV/OR	O-Ring, Volute
5	4-60-UJV1212207	3/4HP Impeller (grey)
	4-60-UJV1212205	1.0HP Impeller (black)
	4-60-UJV1212215	1.5HP Impeller (red/green)
	4-60-UJV1212218	2.0HP Impeller (red)
	4-60-UJV1212225	3.0HP Impeller (red/black)
	4-60-UJV1212221	4.0HP Impeller (blk/grn/rd)
6	4-10-PS3868	Shaft Seal - Viton
	4-10-PS4265	Shaft Seal - Carbon/Buna
7	4-60-UJV1211008	Volute Back
	4-60-UJV1211009	Volute Back, Wide
8	4-60-UJV6010001	Hex Nut 1/4-20, Volute
9	4-60-UJV6011012	Bolt 1-5/8", Volute (3 req'd)
10	4-60-UJV020101	Bolt 2-7/8", Volute (1 req'd)
11	4-60-UJV1218003	Slinger

**** WIDE Front Volute = 3HP Full Rate & Up**

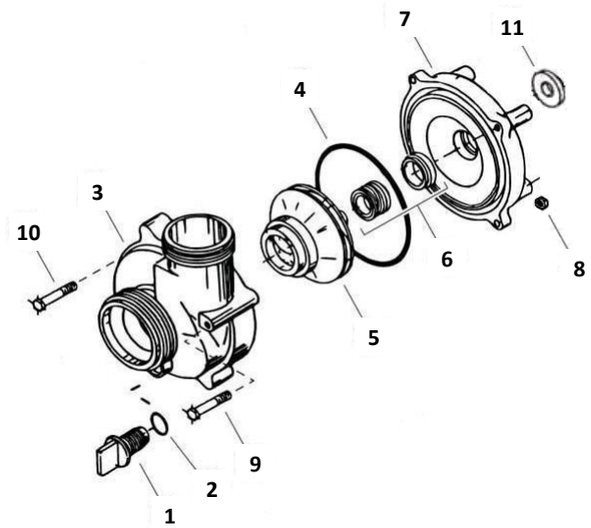

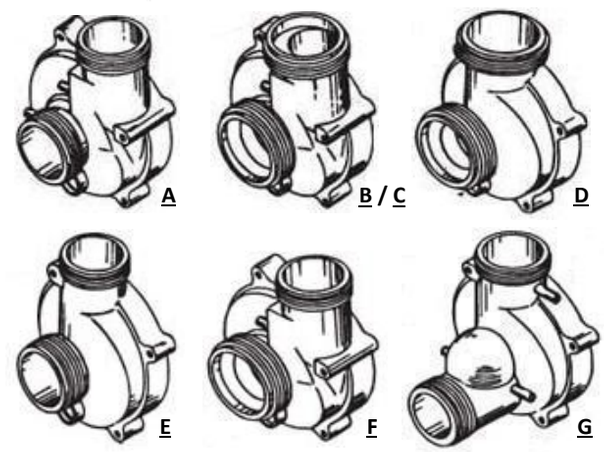

VOLUTE IDENTIFICATION

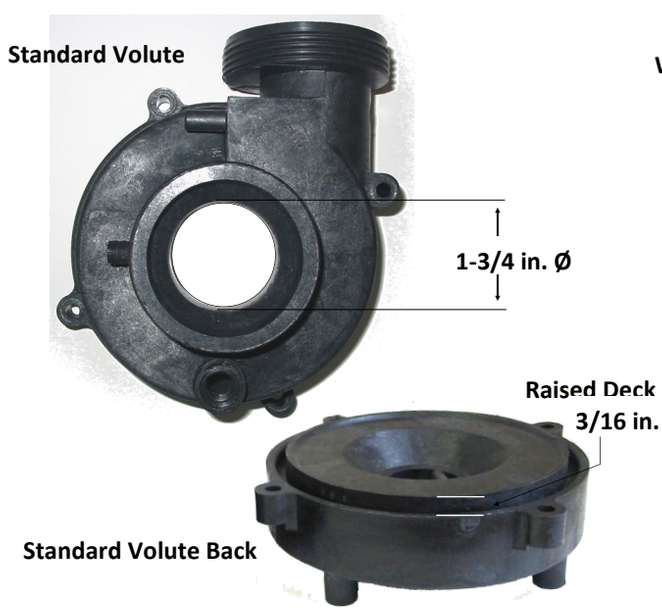

©2018

PUMP PARTS - ULTRA JET - ULTIMAX SERIES

ULTIMAX

Item	Part No.	Description
1	4-60-UJV1214138	Drain Plug
2	4-60-UJV1214136	O-Ring, drain plug
3	4-60-UJV1210020	Volute
4	4-60-UJVO163E70	O-Ring, Volute
5	4-60-UJV1212230	2.0HP Impeller
	4-60-UJV1212235	3.0HP Impeller
	4-60-UJV1212008	4.0HP Impeller
6	4-10-PS3868	Shaft Seal - Viton
	4-10-PS4265	Shaft Seal - Car./Buna
7	4-60-UJV1211027	Volute Back (Seal Plate)
8	4-60-UJV6010001	Hex Nut 1/4-20, Volute
9	4-60-UJV6011012	Bolt 1-5/8", Volute
10	4-60-UJV6011003	Bolt 2-3/4", Volute
11	4-10-PEN1217179	Pump Bracket (48/56FR)
12	4-60-UJV6012011	Screw #8-32 x 5/8"

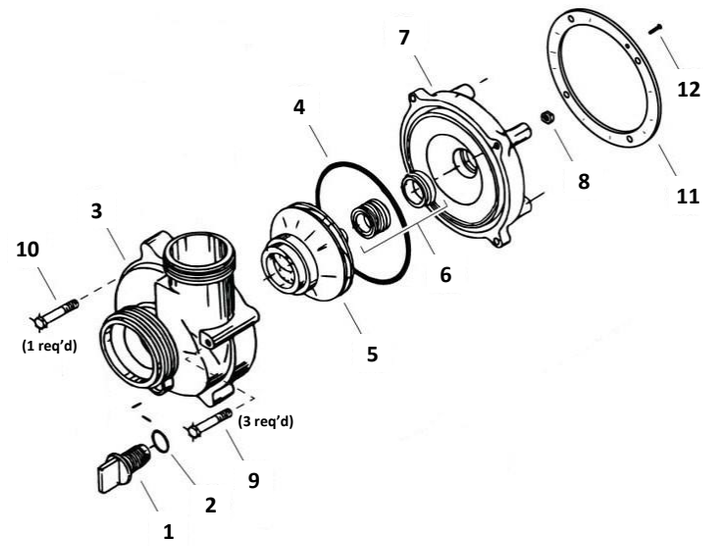

TECH NOTE Ultimax Impellers: it may be necessary to remove the slinger from the motor shaft and/or shorten the impeller shaft for proper fitment.

PUMP PARTS - STA-RITE DURA JET - DJ SERIES

DURA JET - DJ Series

Item	Part No.	Description
1	4-60-STAU178-940P	Drain Plug (course thread)
2	4-60-STA17400-0108	Volute (front plate), 2.0"
3	4-60-STA35505-7430	O-Ring, Volute
4	4-60-STA17400-0120	1.0HP Impeller
	4-60-STA17400-0121	1.5HP Impeller*
	4-60-STA17400-0122	2.0HP Impeller
	4-60-STA17400-0123	2.5HP Impeller*
5	4-10-PS3868	Shaft Seal - Viton
	4-10-PS4265	Shaft Seal - Car./Buna
6	4-60-STA17400-0003	Volute Back (seal plate)
7	4-60-UJV6010001	Hex Nut 1/4-20, Volute
8	4-60-UJV6011012	Bolt 1-5/8", Volute
9	4-60-UJV1218003	Slinger

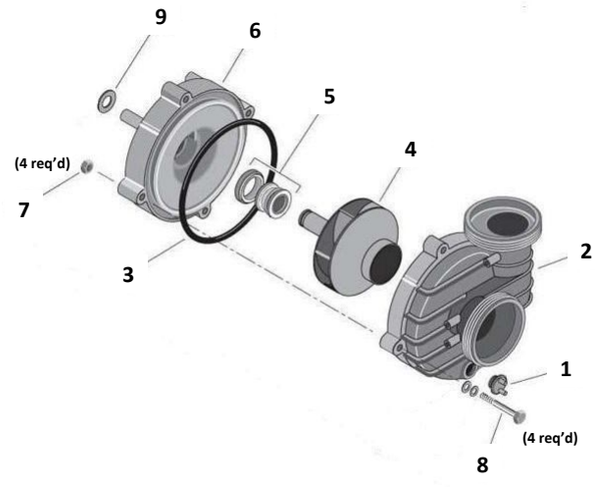

*** 1.5HP also used for 3HP 2-spd uprated**
2.5HP also used for 4HP 2-spd uprated

©2018

Can't find what you're looking for? Contact us...we'll try our best to find it for you!

PUMP PARTS - AQUA-FLO FLO-/CIRC-MASTER SERIES

AQUA-FLO - CMHP & FMHP

Item	Part No.	Description
1	4-60-AF92770501	Volute
2	4-10-PS3867	Shaft Seal - Viton
	4-10-PS3960	Shaft Seal - Car./Buna
3	4-60-AF91693501	1/2HP impeller
	4-60-AF91693551	3/4HP Impeller
	4-60-AF91693601	1.0HP Impeller
	4-60-AF91693651	1.5HP Impeller
	4-60-AF91693701	2.0HP Impeller
4	4-60-AF92200090	O-Ring, Volute
5	4-60-AF92830062	Wear Ring
6	4-60-AF91231301	Faceplate (suction cover)
7	4-60-UJV6012011	Screw #8-32 x 5/8" (OE PN.99730050)
8	4-60-AF92200120	O-Ring, drain plug
9	4-60-AF92290015	Drain Plug - 1/4"NPT

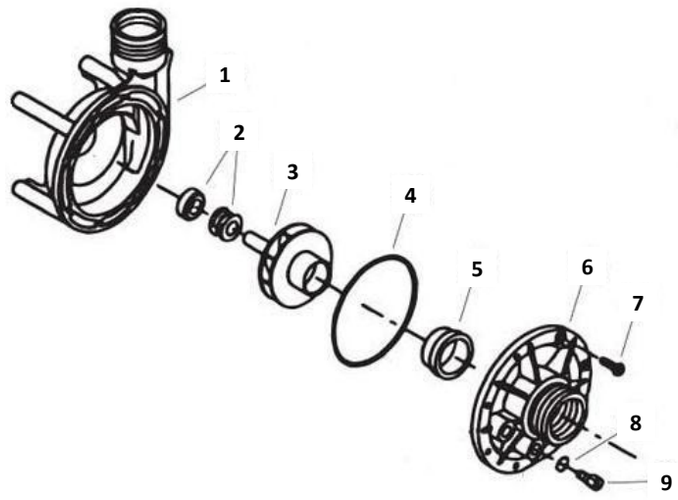

AQUA-FLO - CMCP & FMCP

Item	Part No.	Description
1	4-60-AF92770603	Volute
2	4-10-PS3867	Shaft Seal - Viton
	4-10-PS3960	Shaft Seal - Car./Buna
3	4-60-AF91693501	1/2HP Impeller
	4-60-AF91693551	3/4HP Impeller
	4-60-AF91693601	1.0HP Impeller
	4-60-AF91693651	1.5HP Impeller
	4-60-AF91693701	2.0HP Impeller
4	4-60-AF92200270	O-Ring, Volute
5	4-60-AF92830062	Wear Ring
6	4-60-AF91231402	Faceplate (suction cover)
7	4-60-UJV6012011	Screw #8-32 x 5/8" (OE PN.99730050)
8	4-60-AF92200120	O-Ring, drain plug
9	4-60-AF92290015	Drain Plug - 1/4"NPT

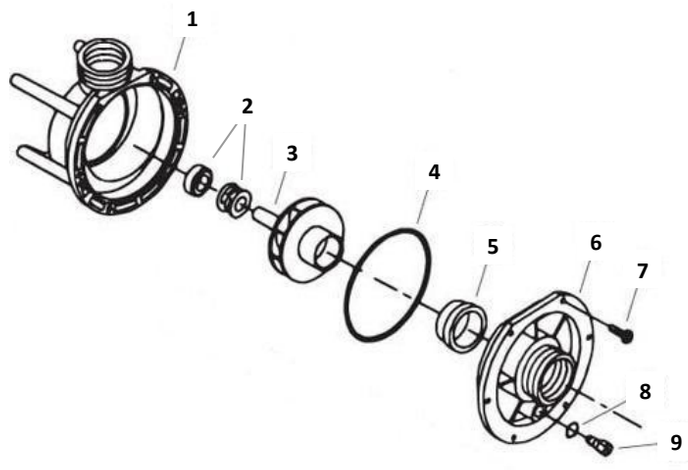

©2018

PUMP PARTS - AQUA-FLO - XP SERIES

AQUA-FLO - XP2 — 2.0" inlet/outlet

Item	Part No.	Description
1	4-60-AF92770705	Volute - 48FR
	4-60-AF92770715	Volute - 56FR (6.1"DIA.)
	4-60-AF92770725	Volute - 56FR (6.3"DIA.)
2	4-10-PS3867	Shaft Seal - Viton
	4-10-PS3960	Shaft Seal - Car./Buna
3	4-60-AF91694150	1.5HP Impeller
	4-60-AF91694200	2.0HP Impeller
	4-60-AF91694251	2.5HP Impeller
	4-60-AF91694300	3.0HP Impeller
	4-60-AF91694400	4.0HP Impeller
4	4-60-AF92830070	Wear Ring 48/56FR
5	4-60-AF92200300	O-Ring, Volute
6	4-60-AF91231606	Faceplate (suction cover, 2")
7	4-60-AF92200060	O-Ring, drain plug
8	4-60-AF92290070	Drain Plug
9	4-60-UJV6012011	Screw #8-32 x 5/8" (OE PN.99730050)

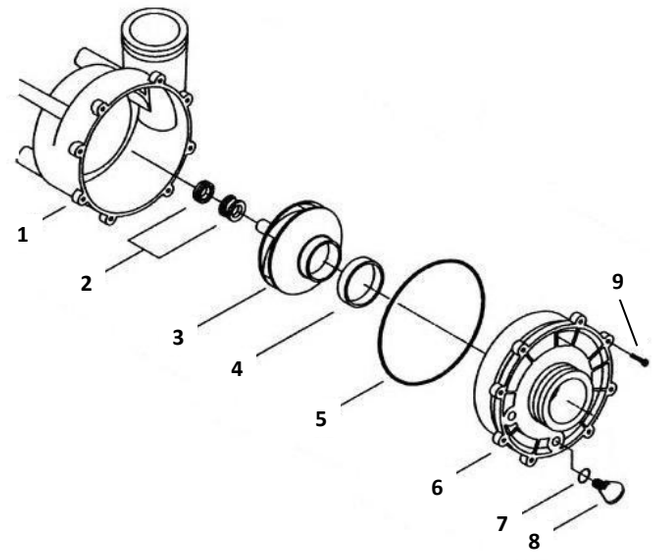

AQUA-FLO - XP2E — 2.0" inlet/outlet

Item	Part No.	Description
1	4-60-AF92770705	Volute - 48FR
	4-60-AF92770725	Volute - 56FR (6.3"DIA.)
2	4-10-PS3867	Shaft Seal - Viton
	4-10-PS3960	Shaft Seal - Car./Buna
3	4-60-AF91695150	1.5HP Impeller
	4-60-AF91695200	2.0HP Impeller
	4-60-AF91695250	2.5HP Impeller
	4-60-AF91695310	3.0HP Impeller
	4-60-AF91695401	4.0HP Impeller
4	4-60-AF92830080*	Wear Ring
	4-60-AF92830081*	Wear ring - for 3.0HP Imp.
5	4-60-AF92200300	O-Ring, Volute
6	4-60-AF91231641	Faceplate (suction cover, 2")
7	4-60-AF92200060	O-Ring, drain plug
8	4-60-AF92290070	Drain Plug
9	4-60-UJV6012011	Screw #8-32 x 5/8" (OE PN.99730050)

TECH NOTE XP2E Wear Rings
AF92830080 = XP2E 1.5, 2.0, 2.5 & 4.0HP impellers only
AF92830081 = XP2E 3.0HP impeller

AQUA-FLO - XP3 — 2-1/2" inlet/outlet

Item	Part No.	Description
1	4-60-AF92770735	Volute - 56FR
2	4-10-PS3867	Shaft Seal - Viton
	4-10-PS3960	Shaft Seal -Car/Buna
3	4-60-AF91698250	2.5HP Impeller
	4-60-AF91698300	3.0HP Impeller
	4-60-AF91698400	4.0HP Impeller
4	4-60-AF92830080	Wear Ring
5	4-60-AF92200310	O-Ring, Volute
6	4-60-AF91231702	Faceplate (suction cover, 2.5")
7	4-60-AF92200060	O-Ring, drain plug
8	4-60-AF92290070	Drain Plug
9	4-60-UJV6012011	Screw #8-32 x 5/8" (OE PN.99730050)

©2018

PUMP PARTS - MISCELLANEOUS

PUMP LEAF TRAP & PARTS

Part No.	Description
4-60-WW310-6600	6.0" Leaf Trap
4-60-WW319-3230	Basket w/handle
4-60-WW319-3260	Lid, clear
4-60-WW805-0436	0-ring, lid

Lid

2" inlet x 2" outlet

Basket

PUMP ANTI-VIBRATION

Part No.	Description
4-10-WW319-0019	Pad

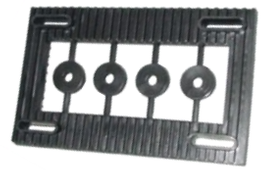

PUMP BRACKET - ULTIMAX

Part No.	Description
4-10-PEN1217179	Cal Spa Ultimax 48/56FR Pump Adapter

Used to rotate the wet-end to in-between angles for difficult plumbing configurations or for adapting a 48FR wet-end to a 56FR motor

PUMP/EQUIPMENT BASE

Part No.	Description
4-60-WW672-1010	Pump Base

MOTOR PARTS - BEARINGS & CAPACITORS

Shaft Seals - p.110

MOTOR BEARINGS

QUALITY DOUBLE SEALED MOTOR BEARINGS...MADE TO LAST!

Part No.	OE Common #	I.D.	O.D.	WIDTH
4-10-6202	6202	15mm	35mm	11mm
4-10-6202-16	6202-16	16mm	35mm	11mm
4-10-6203	6203	17mm	40mm	12mm
4-10-6203-15.9	6203-15.9 (5/8")	15.9mm	40mm	12mm
4-10-6204	6204	20mm	47mm	14mm
4-10-6304	6304	20mm	52mm	15mm

CAPACITORS

Part No.	Type	Volts	MFD	Length	Dia.
4-10-BC53	Start	250	53 - 64	2-3/4"	1-7/16"
4-10-BC64	Start	250	64 - 77	2-3/4"	1-7/16"
4-10-BC88	Start	250	88 - 108	3-3/8"	1-13/16"
4-10-BC108	Start	125	108 - 130	2-3/4"	1-7/16"
4-10-BC145	Start	125	145 - 175	2-3/4"	1-7/16"
4-10-BC161	Start	125	161 - 193	2-3/4"	1-7/16"
4-10-BC189	Start	125	189 - 227	2-3/4"	1-7/16"
4-10-BC216	Start	125	216 - 259	2-3/4"	1-7/16"
4-10-BC270	Start	125	270 - 324	2-3/4"	1-7/16"
4-10-RD25	Run	370	25	2-7/8"	1-3/4"
4-10-RD30	Run	370	30	2-7/8"	1-3/4"
4-10-RD35	Run	370	35	3-3/4"	2.0"
4-10-RD50	Run	370	50	3-3/4"	2.0"

©2018

AIR BLOWERS / INJECTORS / AIR BUTTONS

AIR BLOWERS

Part No.	Description
	WATERWAY STEALTH
4-10-WW700-3151	1.5HP, 120V, 7.6A
4-10-WW700-3152	1.5HP, 240V, 4.2A
	HYDROQUIP SILENT AIRE
4-10-HQ55002	1.0HP, 120V, 4.8A
4-10-HQ55102	1.0HP, 240V, 2.3A
4-10-HQ56002	1.5HP, 120V, 7.0A
4-10-HQ56102	1.5HP, 240V, 3.6A
	CORDS FOR SILENT AIRE ← Alternate SILENT AIRE Blower adapter cords
4-10-HQAD-AMP	AMP, 120/240V, 48"
4-10-HQAD-JJM	J&J, 120/240V, 48"
4-10-HQAD-XEXM1	IN.XE/IN.XM, 120V, 48"
4-10-HQAD-XEXM2	IN.XE/IN.XM, 240V, 48"

STEALTH

See p.42 for WATERWAY Blower cords

SILENT AIRE

SILENT AIRE Blower incudes AMP style cord adapter

AIR INJECTORS

3/8" CONNECTION

Part No.	Description	Hole Size
4-60-WW670-2200	Lo-Pro, 3/8"sb side-inlet, White	3/4"
4-60-WW670-2210	Lo-Pro, 3/8"sb side-inlet, SS	
4-60-WW670-2300	Top-Flo, 3/8"b side-inlet, White	1-3/16"
4-60-WW670-2307	Top-Flo, 3/8"b side-inlet, Grey	
4-60-WW670-2350	Top-Flo, 3/8"b side-inlet, SS	
4-60-WW670-2290	Top-Flo, 3/8"b bottom-inlet, White	1-3/16"
4-60-WW670-2297	Top-Flo, 3/8"b bottom-inlet, Grey	
4-60-WW670-2250	Top-Flo, 3/8"b bottom-inlet, SS (use 4-60-WW670-2350)	
4-60-WW215-2180	Cap/Wall-fitting, for Top-Flo injector, White	
4-60-WW215-2187	Cap/Wall-fitting, for Top-Flo injector, Grey	
4-60-WW670-2130	Micro-Air, 3/8"sb, bottom-inlet, White	3/8"
4-60-WW670-2137	Micro-Air, 3/8"sb, bottom-inlet, Grey	
4-60-WW670-2131	Micro-Air, 3/8"sb, bottom-inlet, Black	
4-60-WW670-2600	Multi-Body, 3/8"sb, White	9/16"

670-2210

670-2307

670-2290

670-2137

670-2600

AIR BUTTONS

Part No.	Description
4-60-0105-K	Tecmark TDI 3428, smooth, white
4-60-WW650-3000	WWay, top access, smooth, white,
4-60-WW650-3400	WWay, gunite application, white
4-60-LG951001-000	Len Gordon #10 Power Touch, white

REQUIRES 1-1/4" HOLE

4-60-0105-K

650-3400

FITS INSIDE 1-1/2" PIPE

REQUIRES 1-1/2" HOLE

650-3000

REQUIRES 1-1/2" HOLE

951001-000

REQUIRES 1-3/4" HOLE

©2018

ELM Engineering Logistics Marketing®

ADJUSTABLE MINI JETS WATERWAY

DELUXE SERIES 2-9/16" DIA. FACE

Part No.	Description
4-60-WW224-1000	Directional, White
4-60-WW224-1007	Directional, Grey
4-60-WW224-1020	Whirly, White
4-60-WW224-1027	Whirly, Grey
4-60-WW224-1040	Pulsator, White
4-60-WW224-1047	Pulsator, Grey

Colour Guide / Guide de couleur
For Part No. ending in / Pour le No. de pièce finissant par:

0 - White/Blanc	1 - Black/Noir	7 - Grey/Gris
0S - White-SS/Blanc-Inox	1S - Black-SS/Noir-Inox	7S - Grey-SS/Gris-Inox

IMPORTANT NOTE Internal nozzle assembly is not included with Adjustable Mini Jets. Please order separately

5-POINT SCALLOP - TEXTURED

2-5/8" DIA. FACE

Part No.	Description
4-60-WW212-1240	Directional, White
4-60-WW212-1247	Directional, Grey
4-60-WW212-1251	Whirly, Black
4-60-WW212-1257	Whirly, Grey
4-60-WW212-1260	Pulsator, White
4-60-WW212-1261	Pulsator, Black
4-60-WW212-1267	Pulsator, Grey

5-PNT SCALLOP - TEXTURED LARGE FACE

3-3/16" DIA. FACE

Part No.	Description
4-60-WW212-1207	Directional, Grey
4-60-WW212-1217	Whirly, Grey
4-60-WW212-1227	Pulsator, Grey

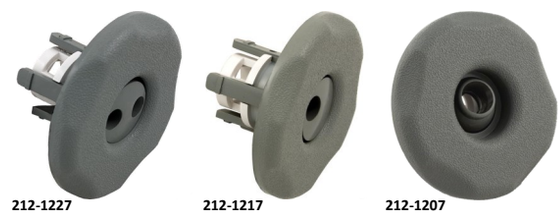

212-1227 212-1217 212-1207

MINI JET BODY & INTERNAL ASSEMBLY

Body has a 2-3/8" flange and requires a 1-3/4" hole

Part No.	Description
4-60-WW212-0850	Internal nozzle assy - Old Style*
4-60-WW212-0880	Internal nozzle assy - New Style
4-60-WW805-0025	O-ring for internal - Large
4-60-WW805-0016V	O-ring for internal - Small
4-60-WW222-0030	Body - 1-1/2"s x 1"s tee style
4-60-WW222-1050	Body - 3/4"s x 3/8"b
4-60-WW222-1040	Body - 3/4"b x 3/8"b

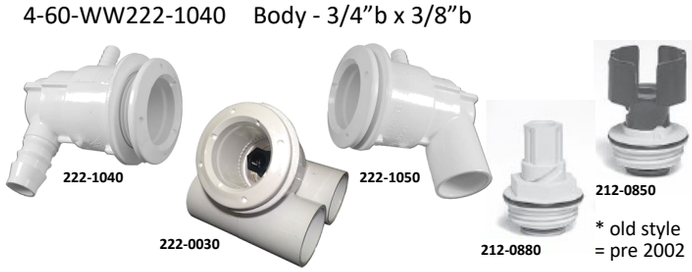

222-1040 222-0030 222-1050 212-0880 212-0850

* old style = pre 2002

SMOOTH FACE 2-5/8" DIA. FACE

Part No.	Description
4-60-WW212-1020	Directional, White
4-60-WW212-1027	Directional, Grey
4-60-WW212-1040	Pulsator, White
4-60-WW212-1047	Pulsator, Grey

STANDARD MINI-JET NON-ADJUSTABLE

PULSATOR, SMOOTH FACE

4-60-WW224-0061 black

©2018

POLY JETS WATERWAY

POLY JET INTERNAL - STANDARD

210-6040

DIRECTIONAL
4-60-WW210-6040 White
4-60-WW210-6047 Grey

WHIRLY (Limited Quantities Available)
4-60-WW210-6750 White
4-60-WW210-6757 Grey

210-6757

PULSATOR (Discontinued)
4-60-WW210-7750 White
4-60-WW210-7757 Grey

210-8750

MONSTER
4-60-WW210-8750 White
4-60-WW210-8757 Grey

POLY JET INTERNAL - DELUXE

210-6080

3-3/8" DIA. FACE

DIRECTIONAL
4-60-WW210-6080 White
4-60-WW210-6087 Grey

210-6097

ROTO
4-60-WW210-6090 White
4-60-WW210-6097 Grey

210-6077

PULSATOR
4-60-WW210-6070 White
4-60-WW210-6071 Black
4-60-WW210-6077 Grey

210-6700

MASSAGE
4-60-WW210-6700 White
4-60-WW210-6707 Grey

POLY JET INTERNAL - 5-SCALLOP

3-1/2" DIA. FACE **4-1/4" DIA. LARGE FACE**

DIRECTIONAL
4-60-WW210-6500 White
4-60-WW210-6501 Black
4-60-WW210-6507 Grey

ROTO
4-60-WW210-6511 Black
4-60-WW210-6517 Grey

ROTO - LARGE FACE
4-60-WW210-6551 Black
4-60-WW210-6557 Grey

PULSATOR
4-60-WW210-6520 White
4-60-WW210-6527 Grey

PULSATOR - LARGE FACE
4-60-WW210-6560 White
4-60-WW210-6567 Grey

MASSAGE
4-60-WW210-6720 White
4-60-WW210-6721 Black
4-60-WW210-6727 Grey

MASSAGE - LARGE FACE
4-60-WW210-6737

210-6500

210-6517

210-6527

210-6727

POLY JET BODY

REQUIRES 2-5/8" HOLE

Part No.	Description
4-60-WW210-5830	Body 1"s x 1"s - no top plug
4-60-WW210-5860	Body 1-1/2"s x 1"s
4-60-WW210-5910	Body 3/4"s x 3/8"rb
4-60-WW711-1750	Gasket, Poly Jet Body

210-5830

210-5860

210-5910

©2018
p: 905.670.5387 f: 905.670.5389 t: 888.502.6960 info@elmsalesandequipment.com

CLUSTER & OZONE JETS WATERWAY

ADJUSTABLE CLUSTER/EURO JET

Part No.	Description
4-60-WW210-1617	Complete, grey, 3/4”s x 3/8”b 1-3/4” face, requires 1.0” hole
4-60-WW212-1610	Body only - new style
4-60-WW805-0012	O-ring for cluster head
New style Face	**1-3/4” Dia. Face**
4-60-WW217-1170	5-point scallop textured, White
4-60-WW217-1177	5-point scallop textured, Grey
Old Style face	**1-1/2” Dia. Face**
4-60-WW217-0510	Scallop, White
4-60-WW217-0517	Scallop, Grey

New style and Old Style face not interchangeable.
New style = 2001 and later

217-0517

217-1177

OZONE CLUSTER JET

1-7/16” DIA. FACE

Part No.	Description
4-60-WW215-9860	White
4-60-WW215-9861	Black
4-60-WW215-9867	Grey
4-60-WW215-9870	Stainless Steel
4-60-WW215-9841	Black - Large Face (2-3/8”)
4-60-WW215-9847	Grey - Large Face (2-3/8”)
4-60-WW212-0600	Front Access Pulsator, White
4-60-WW212-0601	Front Access Pulsator, Black
4-60-WW212-0607	Front Access Pulsator, Grey
4-60-WW212-8831	Cluster Directional, Black
4-60-WW212-8837	Cluster Directional, Grey

215-9867

215-9870

215-9847

212-0601

212-0607

212-8837

212-8831

OZONE CLUSTER JET BODIES

1.0” HOLE REQUIRED

Part No.	Description
4-60-WW211-0300	1/2”s/1”spg x 3/8”b, Straight body
4-60-WW212-0580	1/2”s x 3/8”b, Elbow body
4-60-WW212-0590	3/4”s x 3/8”b, Elbow body
4-60-WW212-0200	1.0”s x 3/8”b, Tee body
4-60-WW212-0090	3/4”rb x 3/8”b, Elbow body

211-0300

212-0580

212-0200
discontinued

212-0090

©2018

Can't find what you're looking for? Contact us...we'll try our best to find it for you!

Waterway CLUSTER & MINI STORM JETS SNAP-IN

DISCONTINUED PRODUCT NOTICE Effective January 1st 2018 Waterway discontinued all Snap-in Storm jet internals with the exception of the 5-Point Scallop series directional jets in Sterling Silver.

AVIS DE PRODUIT DISCONTINUÉ En Vigueur dès le 1er Janvier 2018 Waterway ont cessé de produire tous les internes de Jet enclenché de la série Storm à l'exception des jets de la série "5-point scallop" directionnel en Argent Sterling.

The following jets are limited to QTY on hand, and will be replaced by 4-60-WW212-1549-STS
Les jets suivants sont limités à la quantité en main et seront remplacés par 4-60-WW212-1549-STS

CLUSTER STORM

2.0" DIA. FACE

	5-PNT SCALLOP-SMOOTH	5-PNT SCALLOP-TEXTURE	STAINLESS STEEL
DIRECTIONAL	4-60-WW212-1500 4-60-WW212-1501 4-60-WW212-1507	4-60-WW212-1541 4-60-WW212-1547	4-60-WW212-1500S 4-60-WW212-1501S 4-60-WW212-1507S
TWIN ROTO	4-60-WW212-1521 4-60-WW212-1527	4-60-WW212-1590 4-60-WW212-1597	4-60-WW212-1521S 4-60-WW212-1527S

-replaces ALL Cluster Storm jets- Directional, 5-Scallop, textured, Sterling Sliver

4-60-WW212-1549-STS

4-60-WW212-1781S
4-60-WW212-1787S

The following jets are limited to QTY on hand, and will be replaced by 4-60-WW212-7929-STS
Les jets suivants sont limités à la quantité en main et seront remplacés par 4-60-WW212-7929-STS

MINI STORM

3.0" DIA. STANDARD FACE / 3-5/16" DIA. LARGE FACE

	SMOOTH	5-POINT SCALLOP	STAINLESS STEEL	LRG 5-PT SCALLOP	LRG STAINLESS STEEL
DIRECTIONAL	4-60-WW212-7900 4-60-WW212-7901 4-60-WW212-7907	4-60-WW212-7920 4-60-WW212-7921 4-60-WW212-7927	4-60-WW212-7920S 4-60-WW212-7921S 4-60-WW212-7927S	4-60-WW212-7827	4-60-WW212-7821S
ROTO	4-60-WW212-7910 4-60-WW212-7917	4-60-WW212-7930 4-60-WW212-7931 4-60-WW212-7937	4-60-WW212-7930S 4-60-WW212-7937S	4-60-WW212-7837	4-60-WW212-7831S
TWIN ROTO	4-60-WW212-7940 4-60-WW212-7941 4-60-WW212-7947	4-60-WW212-7950 4-60-WW212-7951 4-60-WW212-7957	4-60-WW212-7950S 4-60-WW212-7957S	4-60-WW212-7847	
MASSAGE	4-60-WW212-7810 4-60-WW212-7817	4-60-WW212-7800 4-60-WW212-7801 4-60-WW212-7807	4-60-WW212-7801S 4-60-WW212-7807S		

-replaces ALL Mini Storm jets- Directional, 5-Scallop, textured, Sterling Sliver

4-60-WW212-7929-STS

Thread-in Storm jets - p.125-126

Storm series jet bodies - p. 127

©2018

ELM Engineering Logistics Marketing®

POLY STORM JETS SNAP-IN Waterway

DISCONTINUED PRODUCT NOTICE Effective January 1st 2018 Waterway discontinued all Snap-in Storm jet internals with the exception of the 5-Point Scallop series directional jets in Sterling Silver.

AVIS DE PRODUIT DISCONTINUÉ En Vigueur dès le 1er Janvier 2018 Waterway ont cessé de produire tous les internes de Jet enclenché de la série Storm à l'exception des jets de la série "5-point scallop" directionnel en Argent Sterling.

-replaces ALL Poly Storm jets- Directional, 5-Scallop, textured, Sterling Sliver

4-60-WW212-8059-STS

Thread-in Storm jets - p.125-126

Colour Guide / Guide de couleur

For Part No. ending in / Pour le No. de pièce finissant par:

0 - White/Blanc	1 - Black/Noir	7 - Grey/Gris
0S - White-SS/Blanc-Inox	1S - Black-SS/Noir-Inox	7S - Grey-SS/Gris-Inox

The following jets are limited to QTY on hand, and will be replaced by 4-60-WW212-8059-STS
Les jets suivants sont limités à la quantité en main et seront remplacés par 4-60-WW212-8059-STS

POLY STORM

	3-3/8" DIA. STANDARD FACE			4.0" DIA. LARGE FACE
	SMOOTH	5-POINT SCALLOP	STAINLESS STEEL	LARGE 5-PT SCALLOP
DIRECTIONAL	4-60-WW212-8040 4-60-WW212-8047	4-60-WW212-8050 4-60-WW212-8051 4-60-WW212-8057	4-60-WW212-8050S 4-60-WW212-8051S 4-60-WW212-8057S	4-60-WW212-8160 4-60-WW212-8167 4-60-WW212-8161S
ROTO	4-60-WW212-8000 4-60-WW212-8007	4-60-WW212-8010 4-60-WW212-8011 4-60-WW212-8017	4-60-WW212-8010S 4-60-WW212-8011S 4-60-WW212-8017S	4-60-WW212-8140 4-60-WW212-8141 4-60-WW212-8147 4-60-WW212-8141S
TWIN ROTO	4-60-WW212-8130 4-60-WW212-8137	4-60-WW212-8120 4-60-WW212-8127	4-60-WW212-8120S 4-60-WW212-8127S	4-60-WW212-8177 4-60-WW212-8177S
MASSAGE	4-60-WW212-8020 4-60-WW212-8021 4-60-WW212-8027	4-60-WW212-8030 4-60-WW212-8031 4-60-WW212-8037	4-60-WW212-8030S 4-60-WW212-8031S 4-60-WW212-8037S	4-60-WW212-8150 4-60-WW212-8151 4-60-WW212-8157

©2018

Vous ne trouvez pas ce dont vous cherchez?
Contactez nous...et nous ferons notre mieux de le trouver pour vous!

Waterway POWER STORM JETS SNAP-IN

DISCONTINUED PRODUCT NOTICE Effective January 1st 2018 Waterway discontinued all Snap-in Storm jet internals with the exception of the 5-Point Scallop series directional jets in Sterling Silver.

AVIS DE PRODUIT DISCONTINUÉ En Vigueur dès le 1er Janvier 2018 Waterway ont cessé de produire tous les internes de Jet enclenché de la série Storm à l'exception des jets de la série "5-point scallop" directionnel en Argent Sterling.

The following jets are limited to QTY on hand, and will be replaced by 4-60-WW212-7639-STS
Les jets suivants sont limités à la quantité en main et seront remplacés par 4-60-WW212-7639-STS

POWER STORM 5.0" DIA. FACE

	SMOOTH	5-POINT SCALLOP	STAINLESS STEEL
DIRECTIONAL			
	4-60-WW212-6640 4-60-WW212-6641 4-60-WW212-6647	4-60-WW212-7630 4-60-WW212-7631 4-60-WW212-7637	4-60-WW212-7630S 4-60-WW212-7631S 4-60-WW212-7637S
TWIRL			
	4-60-WW212-6660 4-60-WW212-6661	4-60-WW212-7640 4-60-WW212-7641 4-60-WW212-7647	4-60-WW212-7640S 4-60-WW212-7641S 4-60-WW212-7647S
ROTO	See tech note		
	4-60-WW212-6630 4-60-WW212-6631 4-60-WW212-6637	4-60-WW212-7600 4-60-WW212-7601 4-60-WW212-7607	4-60-WW212-7600S 4-60-WW212-7601S 4-60-WW212-7607S
TWIN ROTO	See tech note		
	4-60-WW212-6610 4-60-WW212-6611 4-60-WW212-6617	4-60-WW212-7610 4-60-WW212-7611 4-60-WW212-7617	4-60-WW212-7610S 4-60-WW212-7611S 4-60-WW212-7617S
MASSAGE			
	4-60-WW212-6650 4-60-WW212-6651 4-60-WW212-6657	4-60-WW212-7740 4-60-WW212-7741 4-60-WW212-7747	4-60-WW212-7740S 4-60-WW212-7741S 4-60-WW212-7747S

-replaces ALL Power Storm jets- Directional, 5-Scallop, textured, Sterling Sliver

4-60-WW212-7639-STS

Thread-in Storm jets - p.125-126

Storm series jet bodies - p. 127

POWER STORM II

4-60-WW212-6441
4-60-WW212-6447

TECH NOTE
In July 2011 Waterway changed all Roto and Twin Roto Storm series jet nozzles to a fixed 'spin' orientation.

Poly Storm II and the Power Storm II series nozzles rotate on a pin instead of bearings.

©2018

ELM Engineering Logistics Marketing®

CLUSTER & MINI STORM JETS THREAD-IN Waterway

Colour Guide / Guide de couleur
For Part No. ending in / Pour le No. de pièce finissant par:
0 - White/Blanc 1 - Black/Noir 7 - Grey/Gris 0S - White-SS/Blanc-Inox 1S - Black-SS/Noir-Inox 7S - Grey-SS/Gris-Inox

CLUSTER STORM 2.0" DIA. FACE

	5-PNT SCALLOP-TEXTURE	STAINLESS STEEL
DIRECTIONAL	4-60-WW229-1541 4-60-WW229-1547	4-60-WW229-1501S 4-60-WW229-1507S
TWIN ROTO	4-60-WW229-1591 4-60-WW229-1597	4-60-WW229-1521S 4-60-WW229-1527S

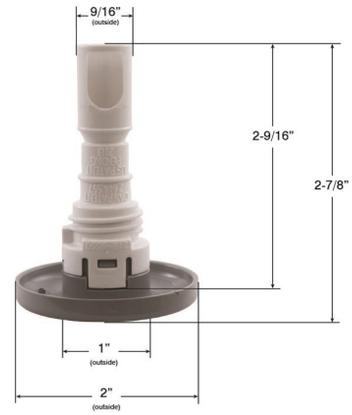

All other styles available upon request

MINI STORM 3.0" DIA. FACE

	5-PNT SCALLOP-TEXTURE	STAINLESS STEEL
DIRECTIONAL	4-60-WW229-7921 4-60-WW229-7927	4-60-WW229-7921S 4-60-WW229-7927S
TWIN ROTO	4-60-WW229-7951 4-60-WW229-7957	4-60-WW229-7951S 4-60-WW229-7957S
MASSAGE	4-60-WW229-0031 4-60-WW229-0037	

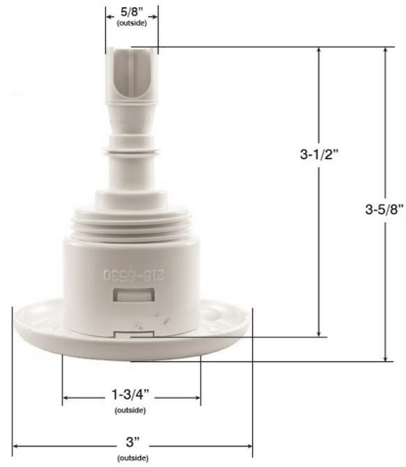

All other styles available upon request

©2018

Vous ne trouvez pas ce dont vous cherchez?
Contactez nous...et nous ferons notre mieux de le trouver pour vous!

Waterway POLY & POWER STORM JETS THREAD-IN

POLY STORM 3-3/8" DIA. FACE

Storm series jet bodies - p. 127

	5-PNT SCALLOP-TEXTURE	STAINLESS STEEL
DIRECTIONAL	4-60-WW229-8051 4-60-WW229-8057	4-60-WW229-8051S 4-60-WW229-8057S
TWIN ROTO	4-60-WW229-8121 4-60-WW229-8127	4-60-WW229-8121S 4-60-WW229-8127S
MASSAGE	4-60-WW229-8031 4-60-WW229-8037	4-60-WW229-8031S 4-60-WW229-8037S

All other styles available upon request

POWER STORM 5.0" DIA. FACE

	5-PNT SCALLOP-TEXTURE	STAINLESS STEEL
DIRECTIONAL	4-60-WW229-7631 4-60-WW229-7637	4-60-WW229-7631S 4-60-WW229-7637S
TWIN ROTO	4-60-WW229-7611 4-60-WW229-7617	4-60-WW229-7611S 4-60-WW229-7617S

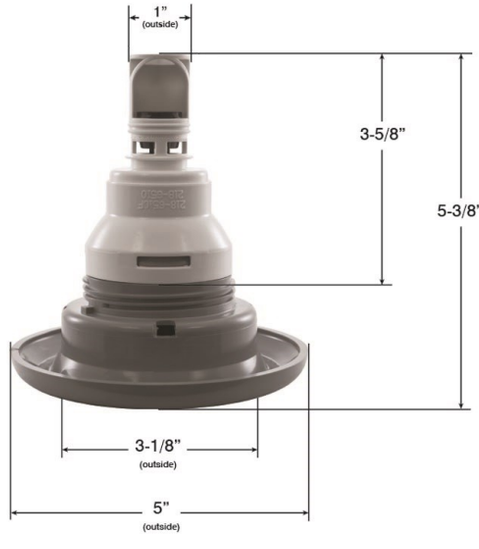

All other styles available upon request

©2018

ELM Engineering Logistics Marketing®

STORM SERIES JET BODIES WATERWAY

Storm series Jets - p. 122-126

CLUSTER STORM JET BODY & PARTS

REQUIRES 1-1/2" HOLE

Part No.	Description
	SNAP-IN
4-60-WW218-5140	Diffuser
4-60-WW212-1550G	Body 3/4"rb X 3/8"rb
4-60-WW212-1570G	Body 3/4"s X 3/8"rb
	THREAD-IN
4-60-WW218-5417	Diffuser
4-60-WW228-1550G	Body 3/4"rb X 3/8"rb
4-60-WW228-1570G	Body 3/4"s X 3/8"rb **(LTD to QTY on hand)**

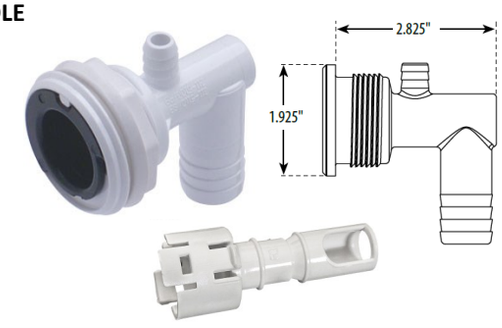

MINI STORM JET BODY & PARTS

REQUIRES 2-3/16" HOLE

Part No.	Description
	SNAP-IN
4-60-WW218-6930	Diffuser
4-60-WW218-6940NS	Retainer Ring, press in
4-60-WW212-0300	Body 3/4"rb X 3/8"rb
4-60-WW212-0330	Body 3/4"sb X 3/8"sb **(LTD to QTY on hand)**
4-60-WW212-0310	Body 3/4"s X 3/8"rb
	THREAD-IN
4-60-WW218-6530	Diffuser
4-60-WW228-0300	Body 3/4"rb X 3/8"rb
4-60-WW228-0330	Body 3/4"sb X 3/8"sb

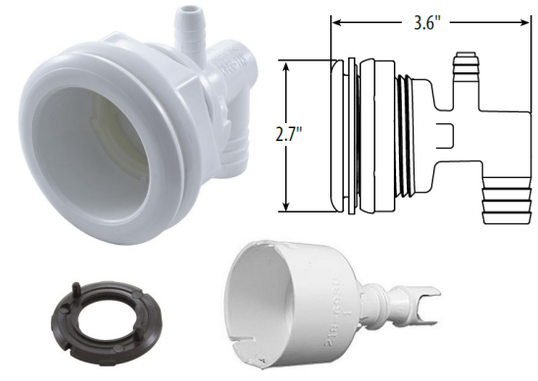

POLY STORM JET BODY & PARTS

REQUIRES 2-5/8" HOLE

Part No.	Description
	SNAP-IN
4-60-WW218-4000	Diffuser
4-60-WW218-6940NS	Retainer Ring, press in
4-60-WW212-0400	Body 3/4"rb X 3/8"rb
4-60-WW212-0410	Body 3/4"s X 3/8"rb
	THREAD-IN
4-60-WW218-6530	Diffuser
4-60-WW228-0400	Body 3/4"rb X 3/8"rb
4-60-WW228-0410	Body 3/4"s X 3/8"rb

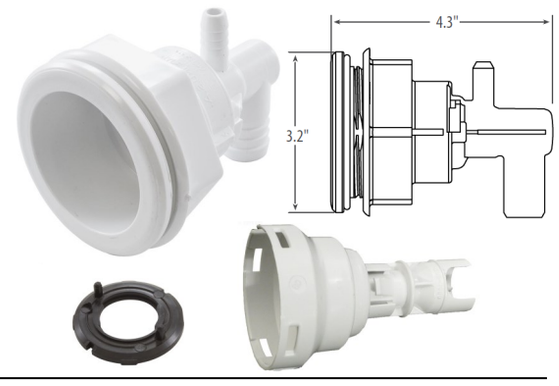

POWER STORM JET BODY & PARTS

REQUIRES 3-3/4" HOLE

Part No.	Description
	SNAP-IN
4-60-WW218-6610	Diffuser
4-60-WW218-7130	Retainer Ring
4-60-WW217-6600	Nozzle - 3/8"
4-60-WW218-6620	Water Ramp
4-60-WW212-0040	Body 3/4"rb X 3/8"rb
4-60-WW212-0020	Body 3/4"s X 3/8"rb
	THREAD-IN
4-60-WW209-1021	Diffuser
4-60-WW228-0040	Body 3/4"rb X 3/8"rb
4-60-WW228-0020	Body 3/4"s X 3/8"rb

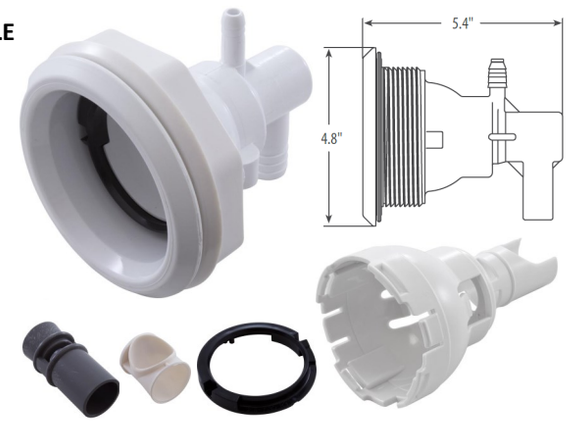

©2018

Vous ne trouvez pas ce dont vous cherchez?
Contactez nous...et nous ferons notre mieux de le trouver pour vous!

JUMBO STORM & POWER SERIES JETS WATERWAY

JUMBO STORM JET - COMPLETE

7-1/2" DIA. FACE REQUIRES 5-1/2" HOLE

WHIRLY

4-60-WW210-6800	Whirly, White
4-60-WW210-6807	Whirly, Grey

PULSATOR

4-60-WW210-6840	Pulsator, White
4-60-WW210-6841	Pulsator, Black

ROTO

4-60-WW210-6817	Roto, Grey
4-60-WW210-6811S	Roto,Black/SS

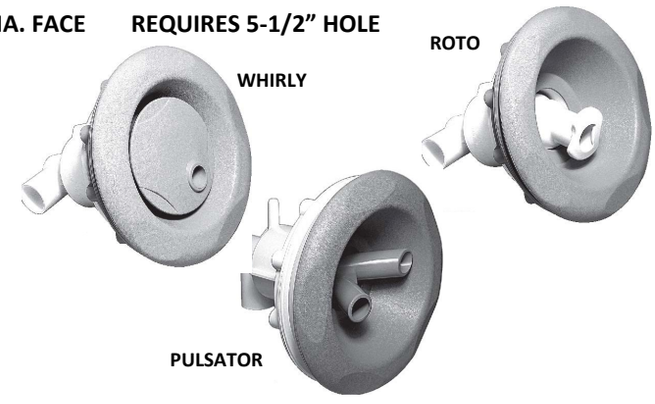

MASTER MASSAGE - COMPLETE

7-1/2" DIA. FACE REQUIRES 5-3/4" HOLE

MASSAGE

4-60-WW210-7157	Grey
4-60-WW210-7189S-DSG	DSG/SS

DSG - Dark Silver Grey

POWER SERIES 'WHIRLPOOL' - 5-SCALLOP

TECH NOTE WHIRLPOOL jet internal not interchangeable with other Power Series jet internals

5" DIA. FACE REQUIRES 3-3/4" HOLE

DIRECTIONAL - non-adjustable

4-60-WW212-2020	White
4-60-WW212-2027	Grey
4-60-WW212-2037S	Grey/SS
4-60-WW212-2031S	Black/SS

DIRECTIONAL - adjustable

4-60-WW212-2050	White
4-60-WW212-2051	Black
4-60-WW212-2057	Grey
4-60-WW212-2061S	Black/SS
4-60-WW218-1600	Diffuser

BODY

4-60-WW212-2000	1-1/2"s x 1/2"s
4-60-WW212-2010**	1.0"s x 1/2"s

212-2000

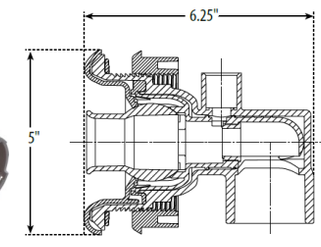

212-2027 212-2037S 212-2057 212-2061S

** Discontinued - limited to qty on hand

POWER SERIES II

4-3/4" DIA. FACE, 3.0" barrel, 4-5/8"-5-1/4"L

4-60-WW212-4487	massage, grey
4-60-WW212-4847	directional, grey
4-60-WW219-4533	retainer ring

no longer available

©2018

AMERICAN PRODUCTS JETS & PARTS

Matching **AP Air Controls** - p. 138

CYCLONE — 5.0" DIA. FACE

Part No.	Description		
JETS			
4-60-AP9783WW	Textured	Adjustable Swirl	Grey
4-60-AP944511WW	Emerald Cut	Adjustable Swirl	Grey
4-60-AP94451111	Emerald Cut	Adjustable Swirl	Black
4-60-AP944530WW	Emerald Cut	Directional	Grey
4-60-AP9511WW	Emerald Cut	Pulsator	Grey
BODY & PARTS			
4-60-AP4797	body - 3/4"b x 3/8"b		
4-60-AP4796	body - 3/4"s x 3/8"b		
4-60-AP4793	gasket, body		
4-60-AP4794	nut, body		

Textured - Swirl

Emerald - Pulsator

CYCLONE LUXURY — 3-1/2" DIA. FACE

JETS			
4-60-AP9840WW	Textured	Adjustable Swirl	Grey
4-60-AP9844WW	Emerald Cut	Directional	Grey
4-60-AP984411**	Emerald Cut	Directional**	Black**
4-60-AP9846WW	Emerald Cut	Adjustable Swirl	Grey
BODY & PARTS			
4-60-AP985900	body - 3/4"b x 3/8"b		
4-60-AP986000	body - 3/4"s x 3/8"b		
4-60-AP985700	gasket (grommet style), body		
4-60-AP985600	nut, body		

Emerald - Directional

** Discontinued - limited to qty on hand

CYCLONE MICRO — 3.0" DIA. FACE

JETS			
4-60-AP9652WW	Emerald Cut	Adjustable Swirl	Grey
4-60-AP965211	Emerald Cut	Adjustable Swirl	Black
4-60-AP9661WW	Textured	Adjustable Swirl	Grey
4-60-AP9653WW	Emerald Cut	Directional	Grey
4-60-AP965300	Emerald Cut	Directional	White
4-60-AP965311	Emerald Cut	Directional	Black
4-60-AP9654WW	Emerald Cut	Dual Swirl	Grey
4-60-AP965411	Emerald Cut	Dual Swirl	Black
4-60-AP9696WW	Diamond Cut	Dual Swirl	Grey
BODY & PARTS			
4-60-AP9569WT	body - 3/4"b x 3/8"b		
4-60-AP9568WT	body - 3/4"s x 3/8"b		
4-60-AP959000	gasket, body		
4-60-AP955900	nut, body		

Emerald - Dual Swirl

Diamond - Directional

CYCLONE EURO — 2.0" DIA. FACE

JETS			
4-60-AP900139WW	Emerald Cut	Directional	Grey
4-60-AP900147WW	Emerald Cut	Swirl Nozzle	Grey
BODY & PARTS			
4-60-AP947600	body - 3/4"b x 3/8"b		
4-60-AP947700	body - 3/4"s x 3/8"b		
4-60-AP943506	gasket (grommet style), body		
4-60-AP985734	nut, body		

Emerald - Directional

Emerald - Swirl Nozzle

©2018

AMERICAN PRODUCTS JETS & PARTS

Part No.	Description		
LUXURY	**3-1/2" DIA. FACE**		
JETS			
4-60-AP94460100*	Emerald Cut	Directional	White
4-60-AP94460111	Emerald Cut	Directional	Black
4-60-AP944601WW	Emerald Cut	Directional	Grey
4-60-AP950300	Emerald Cut	Turbo Swirl	White
4-60-AP9503WW	Emerald Cut	Turbo Swirl	Grey
BODY & PARTS			
4-60-AP47065900	body - 3/4"s x 3/8"b	- call for alternate -	
4-60-AP47412600	body - 1.0"s x 1.0"s		
4-60-AP47065700	flange, body		
4-60-AP46135500	gasket, flange		
4-60-AP470628	o-ring, internal		
4-60-AP47230081	jet retainer ring ('snap ring') w/spacer		

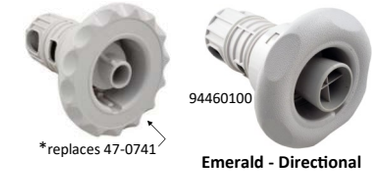

Emerald - Directional

Emerald - Turbo Swirl

Retainer Ring Flange Body

LUXURY MICRO	**2-1/2" DIA. FACE**		
JETS			
4-60-AP474702	Scalloped	Adjusta-Flow (dir.)	White
4-60-AP474802	Scalloped	Adjusta-Swirl	White
4-60-AP47480281	Scalloped	Roto	Grey
4-60-AP941800	Emerald Cut	Directional	White
BODY & PARTS			
4-60-AP452720	Mixing Chamber Repair Kit		
4-60-AP47470700	body - 3/4"s x 3/8"b		
4-60-AP47470300	body - 1.0"s x 1.0"s		
4-60-AP47461700	flange, body		
4-60-AP47069000	gasket, flange		

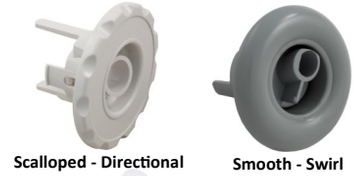
Scalloped - Directional Smooth - Swirl

Emerald - Directional

Mixing Chamber Repair Kit

EURO	**1-1/2" DIA. FACE**	* Cyclone Euro jets also available *	
JETS			
4-60-AP46936400	flange/nozzle assy, Swirl		White
4-60-AP46936481	flange/nozzle assy, Swirl		Grey
BODY & PARTS			
4-60-AP46927200	body - 3/4"b x 3/8"b		
4-60-AP46927300	body - 3/4"s x 3/8"b		

Flange/Nozzle Assy.

DIVERTER JET	**4-5/8" DIA. FACE**		
JETS			
4-60-AP467260WW	Emerald Cut	Diverter Jet	Grey
BODY & PARTS			
4-60-AP47240700	Body, 2-port		
4-60-AP47221500	Wall Flange		
4-60-AP47224000	Gasket, Wall Flange		
4-60-AP47228000	Nut, Wall Flange		

Emerald - Diverter

©2018

Contact us if you can't find what you're looking for…
chances are good we have what you need in stock!

HYDROAIR JETS & PARTS

Part No.	Description	
HYDROJET	**3-3/8" DIA. FACE / Requires 2-1/2" Hole**	
JETS		
4-60-HA10-5100WHT	Hydrojet, complete, 1-1/2"s	White
4-60-HA50-3500WHT	STD Wall Assy, 1-1/4", less nut,	White
	(bone & gray available by request - contact ELM)	
4-60-HA10-3600WH	LONG Wall Assy, 2-1/2", less nut,	White
4-60-HA10-3600BRN	LONG Wall Assy, 2-1/2", less nut,	Brown
BODY & PARTS		
4-60-HA10-4100	body, threaded - 1-1/2"s x 1-1/2"s	Clear
4-60-HA10-4100S	body, slip, w/ext nozzle - 1-1/2"s x 1-1/2"s	
4-60-HA30-3801WHT	STD Wall fitting Flange only,	White
4-60-HA30-3804CLR	gasket, wall fitting flange	
4-60-HA30-3807WHT	nut, wall fitting flange	
4-60-HA30-3805WHT	eyeball,	White
4-60-HA30-3806WHT	retaining ring,	White

STD Wall Assy

LONG Wall Assy

Wall Fitting Flange

Hydrojet Complete

Body - Threaded

Body - Slip w/Ext. Nozzle

MICROJET	**2-5/8" DIA. FACE / Requires 1-3/4" Hole**	
JETS		
4-60-HA10-5200WHT	Microjet, complete, 1.0"s	White
4-60-HA10-3700WHT	STD Wall Assy, 1-1/4", less nut,	White
BODY & PARTS		
4-60-HA50-4200	body - 1.0"s x 1.0"s	white
4-60-HA30-3701WHT	STD Wall fitting Flange only,	White
4-60-HA30-3705CLR	gasket, wall fitting flange	
4-60-HA30-3703WHT	eyeball,	White
4-60-HA30-3704WHT	retaining ring ,	White

Microjet Complete

STD Wall Assy

Body

Wall Fitting Flange

SLIMLINE MICRO	**2-5/8" DIA. FACE / Requires 1-3/4" Hole**	
JETS		
4-60-HA10-5250WHT	Slimline Micro, complete, 1.0"s	White
BODY & PARTS		
4-60-HA50-4205	body - 1.0"s x 1.0"s	Clear
4-60-HA30-3901	wall fitting Flange only,	White
4-60-HA30-3705CLR	gasket, wall fitting flange	
4-60-HA10-3955WHT	escutcheon kit (eyeball & trim)	White

Body

Slimline Micro Complete

Escutcheon Kit

MICRO MAGNA	**2-5/8" DIA. FACE / Requires 1-3/4" Hole**	
JETS		
4-60-HA10-4940WHT*	Micro Directional, complete, 1.0"	White
4-60-HA16-4940WHT*	Micro Massage, complete, 1.0"	White
BODY & PARTS		
4-60-HA10-4207	body w/nozzle - 1.0"s x 1.0"s	Clear
4-60-HA10-4901	wall fitting Flange only,	White
4-60-HA30-3705CLR	gasket, wall fitting flange	
4-60-HA30-4902WHT	adjustment handle	White
4-60-HA16-3912WHT	blaster eye/cage assy	White

Micro Massage

Body

Adjustment Handle

Blaster Eye - Caged

* Special Order

©2018

HYDROAIR JETS & PARTS

Part No.	Description	
CONVERTA'SSAGE / MICRO'SSAGE	**3-1/2" DIA. FACE / Requires 2-1/2" Hole**	
JETS		
4-60-HA10-4500WHT	Converta'ssage, complete, 1.0"s	White
4-60-HA10-4510WHT	Converta'ssage, complete, 1.5"x1"	White
4-60-HA16-5200WHT	Micro'ssage, complete, 1.0"s	White
4-60-HA16-5250WHT	Micro'ssage, complete, 1.5"x1"	White
BODY & PARTS		
4-60-HA56-4200	body - 1.0"s x 1.0"s	Clear
4-60-HA56-4250	body - 1.5"s x 1.0"s	Clear
4-60-HA56-5215WHT	wall fitting Flange only,	White
4-60-HA30-5847CLR	gasket, wall fitting flange	
4-60-HA10-4505WHT	escutcheon kit, Converta'ssage	White
4-60-HA10-4505GRY	escutcheon kit, Converta'ssage	Grey
4-60-HA16-5230WHT	grill & nozzle kit, Micro'ssage	White
4-60-HA16-5230GRY	grill & nozzle kit, Micro'ssage	Grey

THERA'SSAGE	**7-3/4" DIA. FACE / Requires 6" Hole**	
JETS		
4-60-HA16-5550WHT	Thera'ssage, complete, 1.5"x1"	White
BODY & PARTS		
4-60-HA56-4550	(1) body - 1.5"s x 1.0"s	Clear
4-60-HA56-5513WHT	(2) grill assy w/hook ring insert	White
4-60-HA56-5511T	(3) hook ring insert only	
4-60-HA56-5560WHT	(4) nozzle (flowpath) assembly	White
4-60-HA36-5521	(5) inner canister	White
4-60-HA36-5520	(6) outer canister	White
4-60-HA36-5523	(7) gasket	
4-60-HA16-5522	(8) backing plate	

VERTA'SSAGE	**Requires 6" hole**	
JETS		
4-60-HA16-5650	Verta'ssage, complete, 1.5"x1"	White
BODY & PARTS		
4-60-HA56-4550	(1) body - 1.5"s x 1.0"s	Clear
4-60-HA56-5612WHT	(2) grill assembly	White
4-60-HA56-5560WHT	(3) nozzle (flowpath) assembly	White
4-60-HA36-5620WHT	(4) canister	White

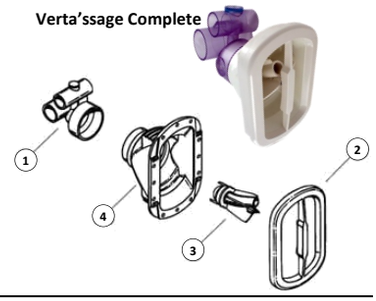

WHIRLPOOL/SWIM	**4-1/2" DIA. FACE / Requires 3-5/16" Hole** **1.5"s water x 1/2"s air**	
JETS		
4-60-HA16-5759WHT	Whirlpool, complete, 1.0" nozzle	White
4-60-HA16-5759GRY	Whirlpool, complete, 1.0" nozzle	Grey
BODY & PARTS		
4-60-HA16-5746WHT	nozzle assy w/seat & lock ring	White

©2018
p: 905.670.5387 f: 905.670.5389 t: 888.502.6960 info@elmsalesandequipment.com

HYDROAIR JETS & PARTS

Part No.	Description	
AF MARK II	**3-1/4" DIA. FACE / Requires 2-5/8" Hole**	
JETS		
Discontinued		
BODY & PARTS		
4-60-HA50-5835WHT	(1) eyeball/nozzle assembly	White
4-60-HA50-5838	(2) seating ring assy, eyeball	
4-60-HA30-5842WHT	(3) retaining ring, eyeball	White
AF MARK II - Freedom (Caged Internal)		
JETS		
4-60-HA16-FS715MC	Freedom Micro'ssage, 1.5"x1"	White
BODY & PARTS		
4-60-HA50-4541	(4) body - 1.5"s x 1.0"s	Clear
4-60-HA50-4580	(5) body - 3/4"s x 3/8"b	Clear
4-60-HA30-5843SBPLWHT	wall fitting Flange only,	White
4-60-HA30-5847CLR	gasket, wall fitting flange	
4-60-HA10-FS35AWHT	(6) eyeball assy, adjustable, caged	White

MAGNA	**3-5/8" DIA. FACE / Requires 2-5/8" Hole**	
JETS		
4-60-HA10-4861	Magna, Directional, 1.5" x 1"	White
4-60-HA16-4861	Magna, Dual-Spinner, 1.5" x 1"	White
BODY & PARTS		
4-60-HA10-4831	(1) body w/flange - 1.0" x 1.0"	Clear
4-60-HA10-4870	(2) body w/flange - 3/4"s x 3/8"b	Clear
4-60-HA30-4801	wall fitting Flange only,	White
4-60-HA30-5847CLR	gasket, wall fitting flange	
4-60-HA30-4802WHT	handle, adjustable	White
4-60-HA30-4802GRY	handle, adjustable	Grey
4-60-HA50-4804	nozzle assembly	White
4-60-HA56-4820WHT	Magna'ssage dual roto	White
4-60-HA56-4820GRY	Magna'ssage dual roto	Grey
4-60-HA56-4821WHT	Magna'ssage single roto	White
4-60-HA56-4821GRY	Magna'ssage single roto	Grey
4-60-HA10-4826WHT	Magnaflo adj eyeball	White
4-60-HA10-4826GRY	Magnaflo adj eyeball	Grey

BUTTERFLY JET	**4-3/4" DIA. FACE / Requires 3-1/4" Hole**	
	* complete Butterfly Jets also available *	
JETS		
4-60-HA50-5064WHT	Trim assy/ jet insert	White
4-60-HA50-5064GRY	Trim assy/ jet insert	Grey
BODY & PARTS		
4-60-HA10-5008	gasket, wall fitting flange	
4-60-HA30-5052	nozzle/diverter, 3-port	
4-60-HA30-5004	locking ring, nozzle	

©2018

CMP Air Controls & Valves - p. 138-140

CMP JETS

TYPHOON - 200 SERIES

Part No.	STYLE	DESCRIPTION		
4-60-CMP23425-012-700	Wave	Dir.	2”	SS/gp-grey
4-60-CMP23426-012-700	Crown	Dir.	2-1/4”	SS/gp-grey
4-60-CMP23422-117-000	5-scallop	Dir.	2”	gp-grey (textured)
4-60-CMP23422-112-000	5-scallop	Dir.	2”	SS/gp-grey
4-60-CMP23422-217-000	5-scallop	Roto	2”	gp-grey (textured)

23425-012-700 23426-012-700

23422-117-000 23422-112-000 23422-217-000

TYPHOON - 300 SERIES

Part No.	STYLE	DESCRIPTION		
4-60-CMP23435-112-700	Wave	Dir.	3”	SS/gp-grey
4-60-CMP23436-012-700	Crown	Dir.	3-1/4”	SS/gp-grey
4-60-CMP23432-217-000	5-scallop	Dir.	3”	gp-grey (textured)
4-60-CMP23432-212-000	5-scallop	Dir.	3”	SS/gp-grey
4-60-CMP23432-317-000	5-scallop	Roto	3”	gp-grey (textured)
4-60-CMP23432-312-000	5-scallop	Roto	3”	SS/gp-grey

23435-112-700 23436-012-700 23432-217-000

23432-212-000 23432-317-000 23432-312-000

TYPHOON - 400 SERIES

Part No.	STYLE	DESCRIPTION		
4-60-CMP23446-012-700	Crown	Dir.	3-3/8”	SS/gp-grey
4-60-CMP23442-117-000	5-scallop	Dir.	3-3/8”	gp-grey (textured)
4-60-CMP23442-327-000	5-scallop	Roto	3-3/8”	gp-grey (textured)
4-60-CMP23442-437-000	5-scallop	Dir.	4”	gp-grey (textured)
4-60-CMP23442-432-000	5-scallop	Dir.	4”	SS/gp-grey

23446-012-700 23442-117-000

23442-437-000 23442-432-000 23442-327-000

TYPHOON - 500 SERIES

Part No.	STYLE	DESCRIPTION		
4-60-CMP23455-012-700	Wave	Dir.	5”	SS/gp-grey
4-60-CMP23452-112-000	5-scallop	Dir.	5”	SS/gp-grey

23455-012-700 23452-112-000

CLASSIC POLY SERIES

Part No.	STYLE	DESCRIPTION		
4-60-CMP23520-114	5-scallop	Directional	2-1/2”	black
4-60-CMP23520-134	5-scallop	Pulsator	2-1/2”	black
4-60-CMP23530-114	5-scallop	Directional	3-1/2”	black
4-60-CMP23530-141	5-scallop	Massage	3-1/2”	grey
4-60-CMP23540-111	5-scallop	Directional	4”	grey
4-60-CMP23548-031	5-scallop	Dual-roto	4-3/4”	grey

23520-114 23520-134 23530-114 23530-141 23540-111 23548-031

JUMBO JET

Part No.
4-60-CMP23570-142

Massage 7” SS/gp-grey

©2018

JET BODIES - CMP

TYPHOON SERIES JET BODIES

Part No.	Description	Hole Size
	3/4"rb X 3/8"rb Bodies	
4-60-CMP23422-000	200s - fits 2" jets	1-1/2"
4-60-CMP23432-000	300s - fits 3", 3-1/4", 3-5/16" jets	2-3/16"
4-60-CMP23442-000	400s - fits 3-3/8", 4", 4-3/8" jets	2-5/8"
4-60-CMP23452-000	500s - fits 5", 5-1/4", jets	3-3/4"

CLASSIC POLY SERIES JET BODIES

Part No.	Description	Hole Size
4-60-CMP23420-000	fits 2-1/2" jets; 3/4"rb X 3/8"rb	1-11/16"
4-60-CMP23420-000-001	Jet nozzle sub-assy for above	
4-60-CMP23430-200	fits 3-1/2", 4" jets; 3/4"s X 3/8"rb	2-9/16"
4-60-CMP23430-500	fits 3-1/2", 4" jets; 1.0"s X 1.0"s	2-9/16"

Jet Nozzle
Sub-assembly

JUMBO JET BODY

Part No.	Description	Hole Size
	2"spg water X 3/8"rb air	
4-60-CMP23470-200	Jumbo series - fits 7", 7-1/4" jets	5-3/4"

JET BODIES - RISING DRAGON

QUANTUM SERIES JET BODIES

Part No.	Description	Hole Size
	SCREW-IN STYLE	
4-60-RD213-2003	fits 2.2" jets, 3/4"rb X 3/8"sb	1-3/4"
4-60-RD203-2003	fits 2.5" jets, 3/4"rb X 3/8"sb	1-3/4"
4-60-RD203-3003	fits 3" jets, 3/4"rb X 3/8"sb	2-3/16"
4-60-RD203-4003	fits 4" jets, 3/4"rb X 3/8"sb	2-5/8"
4-60-RD203-5005	fits 5" jets, 3/4"rb X 3/8"sb	3-3/4"

WHIRLPOOL SERIES JET BODY

Part No.	Description	Hole Size
4-60-RD203-8003	fits all RD Whirlpool jets	3-3/4"
	1-1/2"spg water X 1/2"s air	**FOR SCREW-IN STYLE WHIRLPOOL JET**

DIRECT SERIES JET BODY

Part No.	Description	Hole Size
4-60-RD202-1003	fits all Direct jets	1"
	3/4"rb X 3/8"sb	

©2018

Rising Dragon Air Controls & Valves - p. 138 & 140

RISING DRAGON JETS

QUANTUM SERIES - SCALLOP

Part No.	DESCRIPTION		
	SCREW-IN STYLE		
4-60-RD223-2311	2.2”	Directional	black
4-60-RD223-2411	2.2”	Roto	black
4-60-RD203-2311	2.5”	Directional	black
4-60-RD203-2411	2.5”	Roto	black
4-60-RD203-3711	3”	Directional	black
4-60-RD203-3411	3”	Pulse	black
4-60-RD203-3421	3”	Twin-Pulse	black
4-60-RD203-3211	3”	Pulse	black (Wave face)
4-60-RD203-L4311	4”	Directional	black
4-60-RD203-L4411	4”	Pulse	black
4-60-RD213-4811*	4”	Pulse	black (Multi-Port face)
4-60-RD203-5711	5”	Directional	black
4-60-RD203-5411	5”	Pulse	black
4-60-RD213-5811*	5”	Pulse	black (Multi-Port face)
* special order items			
	SNAP-IN STYLE		
4-60-RD201-2311	2.5”	Directional	black
4-60-RD201-2411	2.5”	Roto	black
4-60-RD201-3417	3”	Pulse	grey
4-60-RD201-3427	3”	Twin-Pulse	grey
4-60-RD201-3711	3”	Directional	black
4-60-RD201-5411	5”	Pulse	black
	PARTS		
	Lock-rings: convert jet body from snap-in to screw-in		
4-60-RD203-3051	jet internal lock-ring 3” & 4”- screw-in adapter		
4-60-RD203-5051	jet internal lock-ring 5”- screw-in adapter		

RD223-2311

RD223-2411

RD203-2311

RD203-2411

RD203-3711

RD203-3411/3421

RD203-3211

RD203-4311

RD203-4411

RD213-4811

RD203-5711

RD203-5411

RD213-5811

WHIRLPOOL SERIES

Part No.	DESCRIPTION		
	SCREW-IN STYLE		
4-60-RD203-8411	6”	Directional	black
	SNAP-IN STYLE		
4-60-RD201-8417	6”	Directional	grey
4-60-RD201-8417S	6”	Directional	SS/grey
4-60-RD201-8411S	6”	Directional	SS/black

DIRECT SERIES

Part No.	DESCRIPTION		
4-60-RD201-1431	2”	Directional	black
4-60-RD201-1421	2”	Roto	black

Roto

Directional

©2018

ELM Engineering Logistics Marketing®

Contact us if you can't find what you're looking for…
chances are good we have what you need in stock!

SPECIALTY JETS - WATER FEATURES

POP-OUT NECK JET

FITS MINI JET BODY w/ OLD STYLE INTERNAL p.119
4-60-WW210-8431* Black

NECK JET - ON/OFF

1/2" SOCKET
4-60-WW210-7010* White
4-60-WW210-7017 Grey

* limited to qty on hand

LED WATER FEATURE - FLUSH MOUNT

3/4" BARB (ribbed)
4-60-WW210-9201 Black
4-60-WW210-9207 Grey

210-9207

Max flow 4.75GPM
@ 3PSI = 48" cascade

WATER FEATURE - POP-UP 180° WATERFALL

3/4" SOCKET
4-60-WW675-2001 Black
4-60-WW675-2007 Grey

675-2000

Max flow 4.75GPM
@3PSI = 48" cascade

AQUA FALL - LOW PROFILE

Part No.	Description
8" WIDE AQUA FALL	**1"S INTAKE, 4-15GPM**
4-60-WW675-4901	Black
4-60-WW675-4900S	Stainless Steel
4-60-WW675-4907	Grey
4-60-WW675-4908	Clear
6" WIDE AQUA FALL	**3/4"S INTAKE, 3-12GPM**
4-60-WW675-4001	Black
4-60-WW675-4008LS	Stainless Steel
4-60-WW675-4007	Grey
4-60-WW675-4008	Clear

675-4907

WATER FEATURE - POP-UP FOUNTAIN

3/4" SOCKET
4-60-WW675-0720 White
4-60-WW675-0727 Grey

3/4" BARB (ribbed)
4-60-WW675-0701 Black

Max flow 4.75GPM
@ 3PSI = 48" cascade

COMMERCIAL JET FITTINGS

EYEBALL FITTINGS

Part No.	Description
4-60-PEN540014	Wall fitting, 1-1/2"mpt, 1/2" orifice, White
4-60-PEN540021	Wall fitting, 1-1/2"mpt, 3/4" orifice, White
4-60-CMP23300-200	Wall fitting, 1-1/2"mpt, White
4-60-CMP23300-000	Body, 1-1/2"S x 1-1/2"S w/nozzle, White
4-60-CMP23300-100	Jet complete, 1/2"air/1-1/2"water , White

23300-100

23300-000

23300-200

540014

540021

Need an eyeball fitting or wall return for a commercial hot tub? If we don't have one in stock that will work for you, we can source what you need fast!

©2018

AIR CONTROLS

WATERWAY REQUIRES 1-5/8” HOLE

SCALLOPED

4-60-WW660-3560 White
4-60-WW660-3561 Black
4-60-WW660-3567 Grey

NOTCHED

4-60-WW660-3570 White
4-60-WW660-3571 Black
4-60-WW660-3577 Grey
4-60-WW660-3577-DSG

5-SCALLOP TEXTURED

4-60-WW660-3580 White
4-60-WW660-3581 Black
4-60-WW660-3587 Grey
4-60-WW660-3587-DSG

HANDLE only - Scalloped

4-60-WW662-2070 White
4-60-WW662-2071 Black
4-60-WW662-2077 Grey

HANDLE only - Notched

4-60-WW662-2100 White
4-60-WW662-2101 Black
4-60-WW662-2107 Grey

HANDLE only - 5-SCALLOP

4-60-WW662-2110 White
4-60-WW662-2111 Black
4-60-WW662-2117 Grey

4-60-WW711-2100 Internal Seal, Upper, for 1.0” Air Controls (above)

TOP DRAW

4-60-WW660-3000 White
4-60-WW660-3100 White

REQUIRES 1-5/8” HOLE

REQUIRES 1-5/16” HOLE

AMERICAN PRODUCTS REQUIRES 1-5/8” HOLE

LUXURY - SCALLOPED

4-60-AP46970000 White

FULL GRIP - EMERALD CUT

4-60-AP90089481 Grey

GENERIC TOP DRAW

HYDROAIR Substitute

4-60-HA10-2100WHT
White

REQUIRES 1-3/4” HOLE

CMP REQUIRES 1-11/16” HOLE

5-SCALLOP

4-60-CMP25090-017
Graphite Grey

S-HANDLE

4-60-CMP25093-107
Graphite / Silver

WAVE

4-60-CMP25090-707
Graphite / Silver

RISING DRAGON

S-HANDLE

4-60-RD601-2350-1
Black

©2018

VALVES - DIVERTER 2.0in.

WATERWAY HOLE SIZE: 3-1/4"

DIVERTER VALVE - 2.0" 2-PORT VERTICAL

Part No.	Description
4-60-WW600-3050	Scalloped, White
4-60-WW600-3051	Scalloped, Black
4-60-WW600-3057	Scalloped, Grey
4-60-WW600-3040	5-Scallop Textured, White
4-60-WW600-3041	5-Scallop Textured, Black
4-60-WW600-3047	5-Scallop Textured, Grey
4-60-WW600-3060	Notched, White
4-60-WW600-3061	Notched, Black
4-60-WW600-3067	Notched, Grey

600-3050 600-3051 600-3057

600-3040 600-3041 600-3047

600-3027 600-3061 600-3067

DIVERTER VALVE - 2.0" 2-PORT HORIZONTAL

Part No.	Description
4-60-WW600-3027	5-Scallop Textured, Grey

CAPS - 2.0" DIVERTER VALVE

Part No.	Description
4-60-WW602-3590	5-Scallop Textured, White
4-60-WW602-3591	5-Scallop Textured, Black
4-60-WW602-3597	5-Scallop Textured, Grey
4-60-WW602-3550	Notched, White
4-60-WW602-3551	Notched, Black
4-60-WW602-3557	Notched, Grey

602-3557

602-3597

4-60-WW805-0113
diverter stem o-ring (2-req'd)

4-60-WW805-0143
body/cap o-ring

4-60-WW602-0960
diverter

HANDLES - 2.0" DIVERTER VALVE

Part No.	Description
4-60-WW602-3520	Scalloped, White
4-60-WW602-3521	Scalloped, Black
4-60-WW602-3527	Scalloped, Grey
4-60-WW602-3570	5-Scallop Textured, White
4-60-WW602-3571	5-Scallop Textured, Black
4-60-WW602-3577	5-Scallop Textured, Grey
4-60-WW602-3540	Notched, White
4-60-WW602-3541	Notched, Black
4-60-WW602-3547	Notched, Grey

602-3527

602-3577

602-3547

CUSTOM MOLDED PRODUCTS (CMP) HOLE SIZE: 3-1/16"

DIVERTER VALVE - 2.0" 2-PORT VERTICAL

Part No.	Description
4-60-CMP25048-017	5-Scallop, Graphite Grey
4-60-CMP25043-107	S-Handle, Graphite/Silver
4-60-CMP25048-707	Wave, Graphite/Silver

5-Scallop

S-Handle

Wave

©2018

VALVES - DIVERTER 1.0in.

WATERWAY

HOLE SIZE: 2-1/16”

DIVERTER VALVE - 1.0” 2-PORT VERTICAL

Part No.	Description
4-60-WW600-4211	5-Scallop Textured, Black
4-60-WW600-4217	5-Scallop Textured, Grey
4-60-WW600-4340	Notched, White
4-60-WW600-4341	Notched, Black
4-60-WW600-4347	Notched, Grey

DIVERTER VALVE - 3/4” 2-PORT VERTICAL 100% shutoff

Part No.	Description
4-60-WW600-4701	5-Scallop Textured, Black
4-60-WW600-4707	5-Scallop Textured, Grey

DIVERTER VALVE - 1.0” 2-PORT HORIZONTAL

Part No.	Description
4-60-WW600-4231	5-Scallop Textured, Black
4-60-WW600-4237	5-Scallop Textured, Grey
4-60-WW600-4330	Notched, White
4-60-WW600-4337	Notched, Grey

600-4217 600-4347 600-4237 600-4337

HANDLES - 1.0” DIVERTER VALVE

Part No.	Description
4-60-WW602-4421	5-Scallop Textured, Black
4-60-WW602-4427	5-Scallop Textured, Grey
4-60-WW602-4330	Notched, White
4-60-WW602-4331	Notched, Black
4-60-WW602-4337	Notched, Grey

602-4427 602-4337

CAPS - 1.0” DIVERTER VALVE

Part No.	Description
4-60-WW602-4431	5-Scallop Textured, Black
4-60-WW602-4437	5-Scallop Textured, Grey
4-60-WW602-4340	Notched, White
4-60-WW602-4341	Notched, Black
4-60-WW602-4347	Notched, Grey

602-4347 602-4437

4-60-WW805-0127SD
body/cap o-ring

4-60-WW602-0980
diverter

VALVES - ON/OFF 1.0in.

WATERWAY

Part No.	Description
4-60-WW600-4360	1-Port, Vert. White
4-60-WW600-4361	1-Port, Vert. Black
4-60-WW600-4367	1-Port, Vert. Grey
4-60-WW600-4370	2-Port, Vert. White
4-60-WW600-4371	2-Port, Vert. Black
4-60-WW600-4377	2-Port, Vert. Grey
4-60-WW600-4380	2-port, Hor. White
4-60-WW600-4381	2-port, Hor. Black
4-60-WW600-4387	2-port, Hor. Grey
4-60-WW605-4370	plunger assy.

600-4367 600-4377 600-4387

CMP

5-SCALLOP
4-60-CMP25036-219
S-HANDLE
4-60-CMP25036-107
WAVE
4-60-CMP25036-707

RISING DRAGON

4-60-RD601-2060-1

©2018

NOTES

ELM Engineering Logistics Marketing

VALVES - KNIFE/GATE

KNIFE / GATE VALVE - PRAHER

Description		Part No.
MULTI-PIECE		
1.5”	SxS	4-60-PR150-GATE
1.5”	SxSPG	4-60-PR150-SLSP
1.5”	SxMPT	4-60-PR150-SLMT
1.5”	FPTxMPT	4-60-PR150-GMFT
2.0”	SxS	4-60-PR200-GATE
2.0”	SxSPG	4-60-PR200-SLSP
2.5”	SxS	4-60-PR250-GATE
3.0”	SxS	4-60-PR300-GATE

KNIFE / GATE VALVE - MAGIC

Description		Part No.
MULTI-PIECE		
1.5”	SxS	4-60-MA0101-15
2.0”	SxS	4-60-MA0101-20
UNI-BODY		
1.5”	SxS	4-60-MA0401-15
1.5”	SxSPG	4-60-MA0412-15
2.0”	SxS	4-60-MA0401-20
2.0”	SxSPG	4-60-MA0412-20

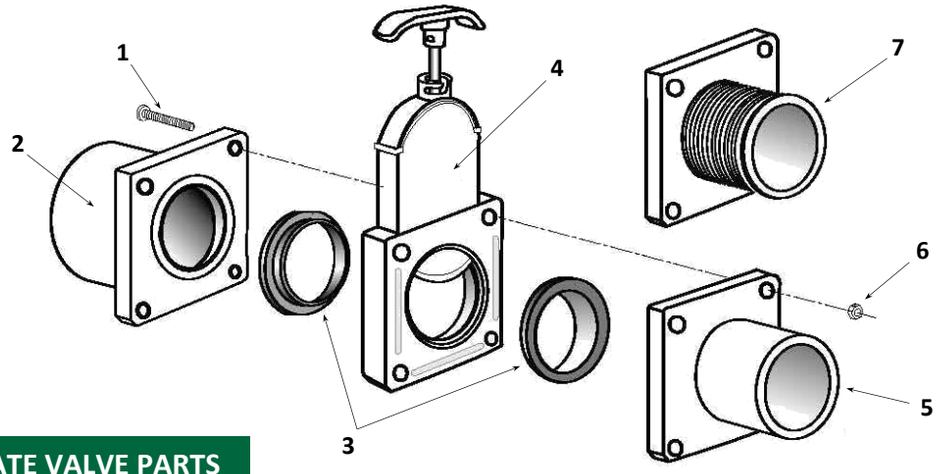

KNIFE / GATE VALVE PARTS

ITEM	Description	Part No.	Part No.	Part No.
	PRAHER	**1-1/2” VALVE**	**2.0” VALVE**	**2-1/2” VALVE**
1	Bolt Set (4)	4-60-PR150-G1	4-60-PR200-G1	4-60-PR250-G1
2	Socket End	4-60-PR150-G2	4-60-PR200-G2	4-60-PR250-G2
3	Gasket Set (2)	4-60-PR150-G3	4-60-PR200-G3	4-60-PR250-G3
4	Body Assembly	4-60-PR150-BA	4-60-PR200-BA	4-60-PR250-G4
5	Spigot End	4-60-PR150-G5	4-60-PR200-G5	4-60-PR250-G5
6	Locknut Set (4)	4-60-PR150-G6	4-60-PR150-G6	4-60-PR250-G6
7	MPT End	4-60-PR150-G8	n/a	n/a
	MAGIC			
1	Bolt Set (4)	4-60-PR150-G1	4-60-PR200-G1	n/a
2	Socket End	4-60-MA0030101015	4-60-MA0030101020	n/a
3	Gasket Set (2)	4-60-MA0080301015	4-60-MA0080301020	n/a
4	Body Assembly	4-60-MA0603-15	4-60-MA0603-20	n/a
5	Spigot End	4-60-MA0040101015	4-60-MA0040101020	n/a
6	Locknut Set (4)	4-60-PR150-G6	4-60-PR150-G6	n/a

p: 905.670.5387 f: 905.670.5389 t: 888.502.6960 info@elmsalesandequipment.com
©2018

VALVES - PRAHER BALL VALVES

BALL VALVES - PRAHER

Description		Part No.
3/4"	SxS	4-60-PR075-000W
1.0"	SxS	4-60-PR100-000W
1.5"	SxS	4-60-PR150-010
1.5"	SxFPT	4-60-PR150-011
1.5"	MPTxFPT	4-60-PR150-015
1.5"	SxMPT	4-60-PR150-016
2.0"	SxS	4-60-PR200-010

BALL VALVE PARTS

ITEM	Description	Part No.	Part No.
		1-1/2" VALVE	**2.0" VALVE**
1	Handle	4-60-PRSU-150-1	4-60-PRSU-200-1
2	Stem O-rings	4-60-PRN-113	4-60-PRN-115
3	Stem	4-60-PRSU-150-3	4-60-PRSU-200-3
4	Body - Socket	4-60-PRSU-150-4	4-60-PRSU-200-4
5	HDPE Ball Seat	4-60-PRSU-150-5	4-60-PRSU-200-5
6	Ball	4-60-PRSU-150-6	4-60-PRSU-200-6
7	O-ring	4-60-PRN-142	4-60-PRN-232
8	Retainer Ring	4-60-PRSU-150-8	4-60-PRSU-200-8
9	O-ring	4-60-PRN-328	4-60-PRN-331
10	Socket End	4-60-PRSU-150-10	4-60-PRSU-200-10
11	Threaded End - FPT	4-60-PRSU-150-11	4-60-PRSU-200-11
12	Nut	4-60-PRSU-150-12	4-60-PRSU-200-12
13	Pin	4-60-PRSU-150-14	4-60-PRSU-200-14

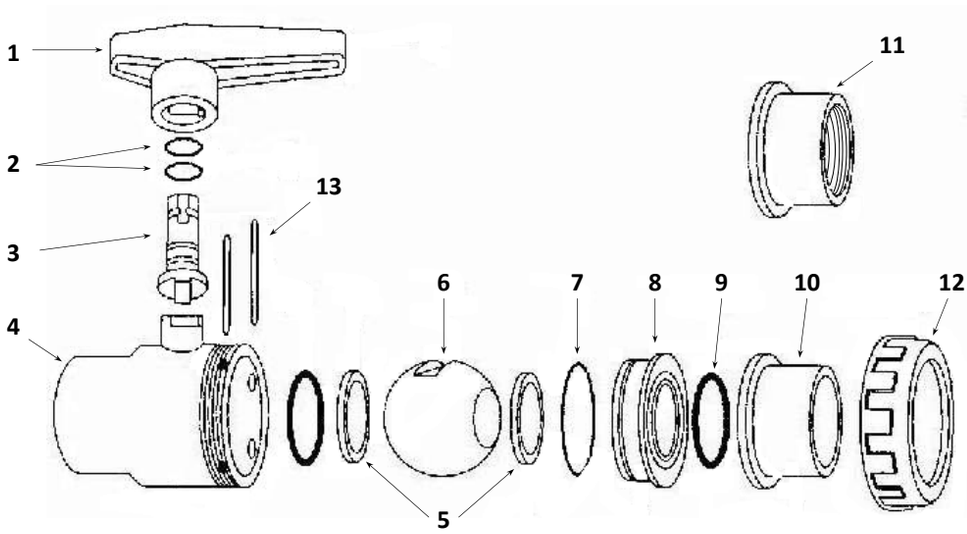

©2018

Vous ne trouvez pas ce dont vous cherchez?
Contactez nous...et nous ferons notre mieux de le trouver pour vous!

VALVES - CHECK/FLAPPER/FILL/DRAIN

DRAIN / FILL VALVE

4-60-WW640-2001	1.0”s, Black
4-60-MA0456-05	3/4”b, Black
4-60-WW400-2070	3/4”s, hose

0456-05

640-2001

400-2070

CHECK VALVES - WATER

4-60-MA0810-05	in-line, 1/2”s x 1/2”s
4-60-FC101107	1/2lb spring; 3/4”s x 3/4”s
4-60-WW550-6810	Flapper; 1.25-2 lbs; 2”s
4-60-WW550-6800	Flapper; 2.5-8 lbs; 2”s
4-60-WW600-4000	Flapper; Cleanout; 1.0”s
4-60-WW600-5000	Ball; tee; 1.0”s
4-60-MA0821-15C	Swing; 1/2lb; 1.5”s; Clear
4-60-MA0821-20C	Swing; 1/2lb; 2.0”s; Clear
4-60-MA0823-20C	Swing; 1/2lb; 2.0” Union; Clear

0810-05

101107

600-5000

600-4000

550-6800 / 6810

0821-20C

0823-20C

HOSE BIBBS

4-60-MA0203-05	1/2”
4-60-MA0203-07	3/4”

CHECK VALVES - AIR

4-60-WW600-8140	1/4 lb; 1-1/2”s
4-60-WW600-8160	1/4 lb; 2”spg

©2018

COVER LIFTERS

COVER LIFTERS

Part No.	Description	Clearance
	REAR CABINET MOUNT	
4-90-MLROLLER	Folding roller	1/2 width of cover
	SIDE CABINET MOUNT	
4-90-ML1EX	Composite brackets, foam grips	10-12 inches
	HEAVY DUTY SIDE / DECK / UNDER MOUNT	
4-90-MLCXH	Heavy Duty Metal, Cross Bar & Handle	6-20 inches
4-90-MLCXHKT	Spring Lift Assist kit for MLCXH	
4-90-MLUMKIT	Under-Mount Kit for MLCXH	

4-90-MLCXH

elevated HANDLE
better leverage

Adjustable Lift Assist
As your cover gets heavier, you simply adjust the spring tension to compensate for the extra weight!

One Lifter...Multiple Applications!
Un Levier... utilisations polyvalentes!

MASTERLIFT CXH

POIGNÉE surélevée
meilleur effet de levier

HEAVY DUTY
brackets & tubes

À TOUTE ÉPREUVE
supports & tuyaux

adjustable LIFT ASSIST
counteracts cover weight !

ASSISTANCE adjustable
contrecarre le poids de la couverture !

Assistance de Levage Réglable
Quand votre couverture devient plus lourde, vous simplement réglez la tension du ressort afin de compenser pour le poids supplémentaire!

INDUSTRIAL STRENGTH
side/deck mount cover lifter
levier pour couverture avec montage sur le côté/terrasse

©2018

Vous ne trouvez pas ce dont vous cherchez?
Contactez nous...et nous ferons notre mieux de le trouver pour vous!

COVER LIFTERS

4-90-ML1EX

Replaces a CoverMate 1 or a Cover Valet EX for LESS $$!

easy to assemble cover lifter kit

Remplace un CoverMate 1 ou un Cover Valet EX pour MOINS $$!

4-90-MLROLLER

simple & durable cover support

©2018

ELM Engineering Logistics Marketing®

ACCESSORIES

ACCESSORIES

FILTER CARTRIDGE CLEANING TOOLS

Part No.	Description
4-70-ACS	Aqua Comb - Spa
4-70-ACP	Aqua Comb - Pool

BIG variety of **Spa Fagrances** - p.70-72

Vacuums & Maintenance Products - p.76-77

Even Removes Heavy Debris Like Gravel and Broken Glass

Self-Priming Vacuums while it drains

PILLOWS - UNIVERSAL SPA & BATH

Part No.	Colour
4-90-HSTPGRY	Grey
4-90-HSTPBRN	Brown
4-90-HSTPBLK	Black
4-90-HSTPBLU	Blue
4-90-HSTPGRN	Green
4-90-HSTPTAN	Tan

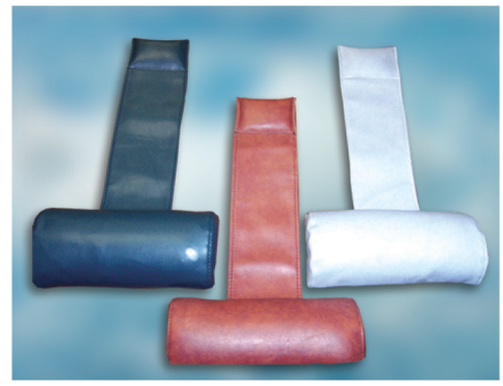

11" wide x 5" high x 2-1/2" thick

More **Dispensers & Water Care Products** - p.68-75

Floating Dispenser

PN# 8-10-MP8055

Floating Dispenser For 1" Tablets

Oil Absorbing Sponge

PN# 8-10-PITB124

Absorbs 40x it's weight in body oils & lotions!

Thermometer

PN# 8-10-MP8120

Floating Thermometer

©2018

SPA STEPS

SPA SIDE STEP WATERWAY

Part No.	Colour
4-90-WW535-2209-GPH	Graphite
4-90-WW535-2209-CIN	Cinnamon
4-90-WW535-2209-CHC	Charcoal
4-90-WW535-2209-BRK	Bark
4-90-WW535-2209-RDW	Redwood
4-90-WW535-2209-CSG	Coastal Grey

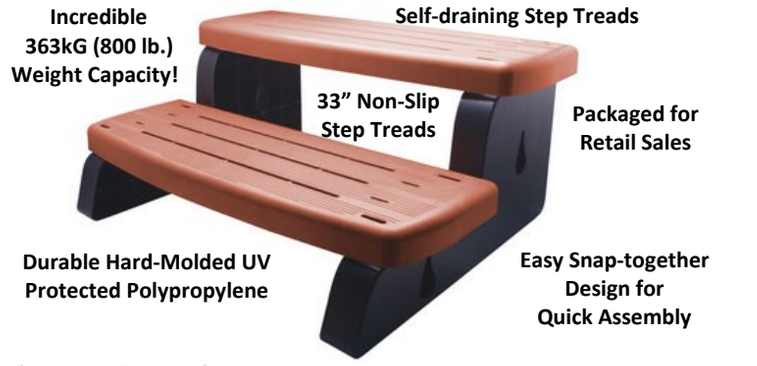

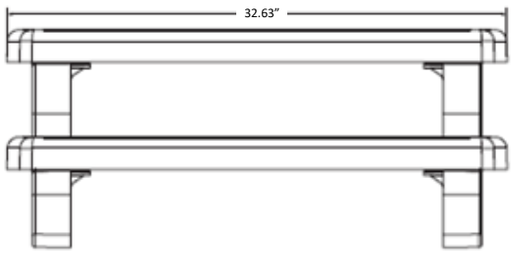

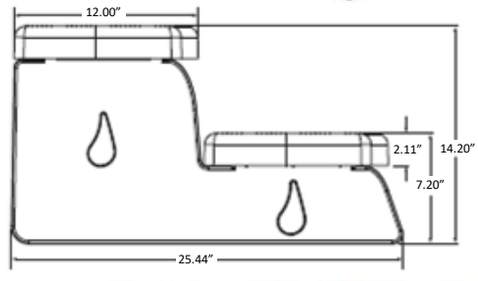

Graphite | Cinnamon | Charcoal | Bark | Redwood | Coastal Grey

SPA COVERS & CAPS

Direct Drop-Shipping Available

Covers, Caps & Straps are SPECIAL ORDER

HARD COVERS

Available up to 6"- 4" taper!

Part No.	Description
4-90-HST32B	Bi-fold 3-2" taper
4-90-HST43B	Bi-fold 4-3" taper
4-90-HST32Q	Quad-fold 3-2" taper
4-90-HST43Q	Quad-fold 4-3" taper

COVER CAPS

Part No.	Description
4-90-HST77EH	7'x7'x12" - elastic hem
4-90-HST88EH	8'x8'x12" - elastic hem
4-90-HST77RL	7'x7'x38" - rope & loops
4-90-HST88RL	8'x8'x38" - rope & loops

HURRICANE STRAPS

Part No.	Description
4-90-HST84HS	up to 84" spa
4-90-HST96HS	up to 96" spa

©2018

ELM Engineering Logistics Marketing

Contact us if you can't find what you're looking for…

We have thousands of items in stock!

(plus many more not listed in our catalogue)

...and if we don't have it in stock, we'll source it FAST.

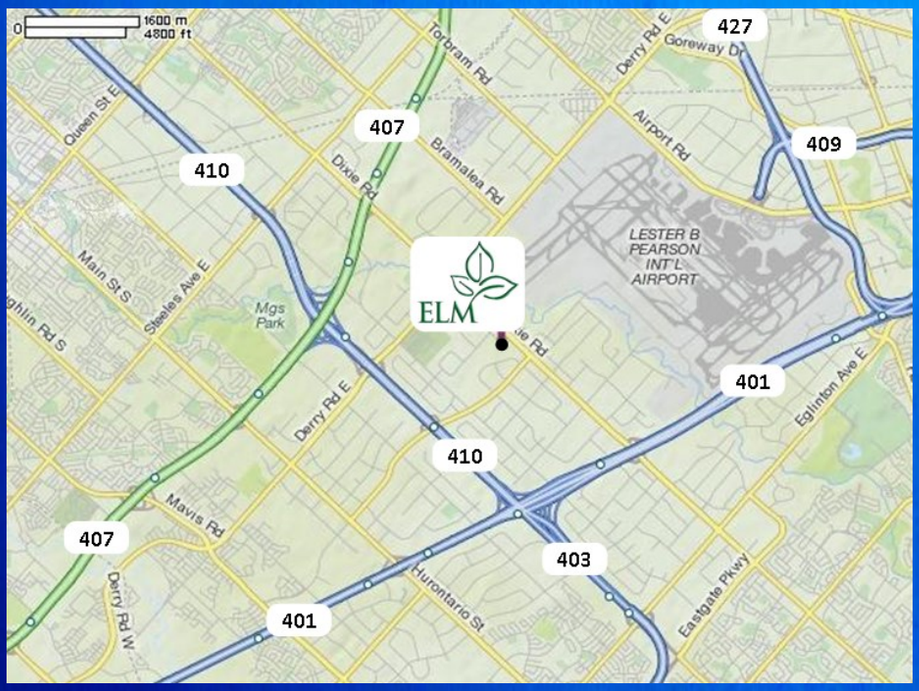

Contactez nous si vous ne trouvez pas ce dont vous recherchez...

Nous avons des milliers d'items en stock

(et encore plus qui ne sont pas inscrit dans notre catalogue)

... si nous ne l'avons pas en stock, nous le trouverions RAPIDEMENT.

ELM ENGINEERING LOGISTICS MARKETING

ELM SALES & EQUIPMENT INC.

6580 Davand Dr. Unit 1 Mississauga ON

phone: 905.670.5387 fax: 905.670.5389 toll free: 888.502.6960

www.elmsalesandequipment.com